AVTM655860J
Rev. A
August 2004

Instruction Manual AVTM655860J

for

Arc Reflection Filter
Catalog No. 655850

High-Voltage Equipment
Read the entire manual before operating.

Aparato de Alto Voltaje
Antes de operar este producto lea este manual enteramente.

Megger.

Valley Forge Corporate Center
2621 Van Buren Avenue
Norristown, PA 19403 U.S.A..

www.megger.com

Arc Reflection Filter
Catalog No. 655850

The information presented in this manual is believed to be adequate for the intended use of the product. If the product or its individual instruments are used for purposes other than those specified herein, confirmation of their validity and suitability must be obtained from Megger. Refer to the warranty information below. Specifications are subject to change without notice.

TABLE OF CONTENTS

LIST OF ILLUSTRATIONS

LIST OF TABLES

1

Introduction

RECEIVING INSTRUCTIONS

Check the equipment received against the packing list to ensure that all materials are present. Notify Megger of any shortage. Telephone (610) 676-8500.

Examine the instrument for damage received in transit. If any damage is discovered, file a claim with the carrier at once and notify Megger giving a detailed description of the damage.

This instrument has been thoroughly tested and inspected to meet rigid specifications before being shipped. It is ready for use when set up as indicated in this manual.

GENERAL INFORMATION

The Arc Reflection Cable Fault Locating System is designed to locate cable faults on cables rated up to 35 kV ac phase-to-phase. A complete system requires an Arc Reflection Filter, impulse generator and a Dart® Cable Analysis System. Catalog No. 655850 includes an Arc Reflection Filter and the cables necessary to operate a system. This manual describes the Arc Reflection Filter, but also details pertinent system information; separate instruction manuals describe the operation of the Megger impulse generator and the Dart Cable Analysis System.

WARNING

Grounding systems and procedures contained in this manual are designed specifically for Megger equipment. If other manufacturer's equipment is used with the Arc Reflection Filter, it is the responsibility of the user, paying careful attention to safety, to verify that grounding and interconnections between the systems are made in accordance with each manufacturer's specific instructions. Incompatible grounding systems may prove hazardous.

A two-position MODE SELECTOR switch on the Arc Reflection Filter allows implementation of most fault location methods without the need to disconnect the Arc Reflection Filter from the other test equipment. This permits the Arc Reflection Filter to be permanently wired together with the other elements in the system ensuring operator safety and ease of use.

The Arc Reflection Filter is housed in a sturdy metal cabinet using welded construction throughout to withstand the rigors of operation in the field. If permanent installation in a vehicle is desired, the base skids may be used for mounting.

Different fault locating methods are implemented by setting the MODE SELECTOR switch on the Arc Reflection Filter to the appropriate position. When the switch is set to PROOF/BURN/IMPULSE, the Arc Reflection Filter is bypassed allowing for stand-alone operation of the impulse generator, proof tester, or dc burner. In addition, a wideband current transformer output is included making the unit compatible with the surge pulse fault location method. When the switch is set to ARC REFLECTION TEST, the Arc Reflection Filter network is connected to the cable under test and the operator can use the arc reflection test (ART) or time domain reflectometry (TDR). Several possible test methods are described in the following.

Proof Testing

The proof test is performed to determine whether the cable insulation is good or bad. The cable under test is raised to the required voltage and held there for a prescribed period of time. If the insulation can withstand this voltage, the proof condition has been met and the cable is good. If the insulation is faulty (internal breakdown), the proof condition will not be met and additional testing will be required to locate the fault. Proof tests are an effective method for determining the breakdown voltage of a defective cable prior to fault locating.

Burn Operation

The burn operation is performed to alter the electrical characteristics of the cable fault so that it will break down within the impulse voltage range of the system. This change is produced by burning the cable fault, so as to carbonize the walls of the fault, in effect reducing its internal resistance. This reduction in fault resistance will cause the fault to break down at a lower voltage, facilitating the use of other methods to measure the distance to the fault.

Impulse Tracing

In the impulse tracing method of fault location, a high-voltage impulse is repeatedly applied to the defective cable. The high-voltage impulse causes a large surge current to pass through the fault. Often there is a large acoustic emission at the fault site caused by the breakdown of the fault. The fault position along the cable is traced using detectors designed to respond to either the acoustic or electromagnetic disturbance caused by impulsing the fault. Tracing methods are effective for determining the precise location of a fault. The following Megger impulse detectors are suitable for these uses:

Cat. No.	Description
653000	Surge Detector (for direct buried cable)
651113	Electromagnetic Impulse Detector (for ducted and buried cable)

Time Domain Reflectometry (TDR)

The TDR method of fault location uses low-voltage pulses to identify impedance discontinuities along a defective cable. The TDR transmits a low-voltage pulse down the defective cable which reflects back from the impedance discontinuity of the fault. The pulse reflected from the fault is observed on the TDR screen as either a negative reflection or positive reflection depending on the fault characteristics. These reflections are used to determine the distance to the fault. This method is only effective if the cable has a low impedance fault (negative reflection) or if the cable is burned open at the fault (positive reflection).

Arc Reflection Test (ART)

In the ART method of fault location, a long duration, oscillatory, high-voltage impulse is applied to the defective cable. This impulse causes the defective cable to break down and form a low impedance arc at the fault site. Simultaneous with the application of the high-voltage, a low-voltage TDR pulse is transmitted down the defective cable. When the low-voltage pulse arrives at the fault, it is reflected back since the arc is nearly a short circuit. The low-voltage pulses reflected from the fault are observed on the TDR screen as negative reflections and are used to determine the distance to the fault. The ART is an effective method for rapidly localizing high resistance faults.

Surge Pulse Method

The following method is compatible with the Arc Reflection Filter.

Surge Pulse Method: In the surge pulse method of fault location, a high-voltage impulse is applied to the defective cable. This impulse causes the defective cable to break down and form a low impedance arc at the fault site. The electrical transient associated with the breakdown travels along the cable, reflecting back and forth between the fault and the test set. A wideband current transformer is used to measure the fault transient which is then recorded using a Dart Cable Analysis System. The current transient appears as an oscillation and the period of this oscillation is used to determine the distance to the fault. The surge pulse method is an effective method for rapidly localizing high resistance faults. A wideband current transformer is incorporated in the Arc Reflection Filter.

2

Safety

The Arc Reflection Filter and recommended operating procedures have been designed with careful attention to safety. Megger has made formal safety reviews of the initial design and any subsequent changes. This procedure is followed for all new Megger products and covers areas in addition to those included in applicable ANSI standards. Regardless of these efforts, it is not possible to eliminate all hazards from electrical test equipment or to foresee every possible hazard which may occur. It is therefore essential that the user, in addition to following the safety rules in this manual, also carefully consider all safety aspects of the test before proceeding. Safety is the responsibility of the user.

This equipment and the cable to which it is connected are sources of high-voltage electrical energy. Observe the following safety precautions:

- Observe all safety warnings marked on the equipment. These warnings identify areas of immediate hazard which could result in personal injury or loss of life.
- Do not use for any purpose other than described.
- Do not use this equipment to locate faults on any cable which is likely to be near enough to an energized cable to allow a burn through of the insulation of the energized cable. This situation may occur when the cables are located in a common trench, duct or tray (e.g., three-phase systems).
- Do not use this equipment to locate faults on direct-buried unshielded or secondary cable. Dangerously high differences in potential may be developed in the current return path.
- Do not operate the equipment with either the side covers or the top panel removed. Operation without the protective instrument covers presents an electric shock hazard. Furthermore, in the event of failure, components can shatter and send pieces of porcelain, hardware, etc., in all directions at high velocity. The covers in place will prevent injury to personnel if this type of failure occurs.
- Treat all terminals of high-voltage power equipment as a potential electric shock hazard.
- Use all practical safety precautions to prevent contact with energized parts of the equipment and related circuits.
- Stand clear, by at least 3 ft (0.91 m) of all parts of the complete high-voltage circuit, including connections, unless the equipment is de-energized and all parts of the test circuit are grounded.

- Use suitable barriers, barricades, or warnings to keep persons not directly involved with the work away from test activities.
- Do not connect to energized equipment or use in an explosive atmosphere.
- Use the recommended grounding and connection procedures described in Sections 5, 6, and 7.
- Refer to IEEE 510-1983 "IEEE Recommended Practices for Safety in High-Voltage and High-Power Testing" for additional information.

This equipment, the impulse generator, and the specimen to which it is connected are a source of high-voltage electrical energy and all persons making or assisting in tests must use all practical safety precautions to prevent contact with energized parts of the test equipment and related circuits. Persons actually engaged in the test must stand clear of all parts of the complete high-voltage circuit, including all connections, unless the test set is de-energized and all parts of the test circuit are grounded. Persons not directly involved with the work must be kept away from test activities by suitable barriers, barricades, or warnings. An interlock circuit is provided to enable the operator to enclose all parts of the complete high-voltage circuit within a secure area. The interlock circuit should be used to shut off input power automatically upon unauthorized entry into the high-voltage area.

The Arc Reflection Filter is a passive device and does not require any input power; however, the impulse generator and Dart Cable Analysis System do. The impulse generator and Dart Cable Analysis System both operate from a single-phase power source. They have a three-wire power cord and a two-pole, three-terminal grounding type connector. The voltage to ground from either pole of the power source must not exceed the maximum rated operating voltage, either 120 V ac or 240 V ac depending on the system purchased. Before making connection to the power source, determine that the instrument is suitable for the voltage of the power source, and has a suitable two-pole, three-terminal grounding type connector. The power source must have a high rupture fuse or circuit breaker rated no higher than 15 A.

The power input plug must be inserted only into a mating receptacle with a ground contact. Do not bypass the grounding connection. Any interruption of the grounding connection can create an electric shock hazard. Determine that the receptacle is correctly wired before inserting the plug.

High-voltage electrical impulses and resultant current pulses create special safety problems. Large, rapidly changing currents, even across small values of impedance, can generate high-voltage levels. Two separate and distinct grounds are provided: STAR GROUND (the system chassis ground) and SURGE GROUND. The SURGE GROUND is designed to return the impulse current directly back to the impulse capacitor through the coaxial shield of the high-voltage output cable. The operator is isolated from any transient voltage rise along the SURGE GROUND by the insulation system in the filter and the insulated jacket of the high-voltage output cable. The low-voltage lead of the

output cable (SURGE GROUND) must not be extended as this introduces excessive impedance in the return path. The system ground (STAR GROUND), which must be connected to a good LOCAL EARTH GROUND (less than 5 Ω), is designed to protect the operator by preventing a difference of potential between the system and the ground in the immediate vicinity. The potential in the immediate vicinity is readily maintained by connecting to a driven earth ground (less than 5 Ω) and connecting it to the system chassis ground (STAR GROUND).

If the Arc Reflection Filter is mounted in a vehicle, the system ground (STAR GROUND) must be connected to the frame of the vehicle to maintain the vehicle at the same potential as the system and the immediate vicinity. For safe operation under fault conditions, a SAFETY GROUND is used in parallel with ground conductor (sheath) of the coaxial output cable (SURGE GROUND). This SAFETY GROUND is connected to the system ground (STAR GROUND) and to the ground of the cable under test (SPECIMEN GROUND). For a complete description of the ground system and individual grounds, refer to Section 5. The Arc Reflection Filter should only be operated with the ground connections described in Section 5, 6, and 7.

On completion of a test, even after power has been removed, energy can still be stored in the capacitor in the impulse generator, the output cable of the filter, the cable under test, and the capacitor in the Arc Reflection Filter. For this reason, the Arc Reflection Filter should be grounded after use. Megger impulse generators include both automatic grounding and manual grounding features that will quickly reduce such stored energy to a safe low level. Immediately after use, the MODE SELECTOR switch on the impulse generator should be returned to the GROUND position using the transfer procedure described in Section 6. With this switch set to GROUND and the MODE SELECTOR switch of the Arc Reflection Filter set to either PROOF/BURN/IMPULSE or ARC REFLECTION TEST, the output cable is grounded. The impulse capacitor is shorted automatically by the discharge resistor when not in use.

WARNING

Never assume that the coaxial output cable or the cable under test is completely discharged, even after following the above procedures. Always use a SAFETY GROUNDING STICK to ground any conductive part of the circuit and then apply SAFETY GROUND JUMPERS before touching any connections.

Treat all terminals of high-voltage power equipment as a potential electric shock hazard. There is always the potential of voltages being induced at these terminals because of proximity to energized high-voltage lines or equipment. A SAFETY GROUND JUMPER must be installed between the high voltage conductor and ground of the cable under test (SPECIMEN GROUND). This discharges any potentially hazardous voltages in the cable under test. Always disconnect test leads from power equipment before attempting to disconnect them at the test equipment. The ground connections must be the first made and the last

removed. Any interruption of the grounding connection can create an electric shock hazard.

If the equipment is operated in accordance with the safety precautions described and if all grounds are correctly made, rubber gloves are not necessary. As a routine safety procedure, however, some users require that rubber gloves be worn, not only when making connections to the high-voltage terminals but also when manipulating controls. Megger considers this an excellent safety practice.

Users of high-voltage equipment should note that high-voltage discharges and other sources of strong electric or magnetic fields may interfere with the proper functioning of heart pacemakers. Personnel using heart pacemakers should obtain expert advice on the possible risks before operating this equipment or being close to the equipment during operation.

Megger recommends that a qualified operator be in attendance at all times while the system is in operation. Component replacement and internal adjustments must be made by qualified service personnel only.

The following warning and caution notices are used in this manual where applicable and should be strictly observed.

WARNING

Warning, as used in this manual, is defined as a condition or practice which could result in personal injury or loss of life.

CAUTION

Caution, as used in this manual, is defined as a condition or practice which could result in damage to or destruction of the equipment or apparatus under test.

3

Specifications

These specifications apply to the Arc Reflection Filter. Refer to separate instruction manuals for the Dart Cable Analysis System and the impulse generator for their respective specifications.

ELECTRICAL

Compatible Modes

MODE SELECTOR switch set to ARC REFECTION TEST:

- Arc reflection, surge mode
- Surge pulse method
- Time domain reflectometry (TDR)

MODE SELECTOR switch set to PROOF/BURN IMPULSE:

- Surge pulse method
- Impulse tracing
- dc burn
- dc proof

Voltage

- dc: 50 kV
- Impulse: 25 kV
- Transient withstand: 50 kV
- Duty Cycle @ 25 kV: Continuous
- Polarity: Bipolar

Current

Arc reflection mode:

Peak current @ 1250 Joules: 77 A

Duty cycle @ 1250 Joules: continuous

Peak current @ 450 Joules: 45 A

Duty cycle @ 450 Joules: continuous

Peak output current calculated by: 2.1 $(E)^{1/2}$ A

$E = (\frac{1}{2}CV^2)$ = Impulse generator energy

C = Impulse generator capacitance

V = Impulse generator voltage

Impulse mode:

Duty cycle @ 20,000 A peak impulse: continuous

Discharge Characteristic

Internal energy: less than 60 seconds to 1 percent of initial starting voltage

High-voltage waveform: (arc reflection mode)

Exponentially damped sinusoid

Fundamental frequency (f0):

4 μF - 125 Hz

16 μF - 62 Hz

Fundamental frequency calculated by: $0.252(C)^{-1/2}$ Hz

C = Impulse generator capacitance in μF

Quality factor (Q): 0.2 f_0

PHYSICAL CHARACTERISTICS

Dimensions: 13½ in. square x 27 in. H (34 cm square x 69 cm H)

Weight: 120 lb (55 kg)

ENVIRONMENTAL

Operating temperature range: -4 to 122°F (-20 to 50°C) continuous duty

Storage temperature range: -22 to 131°F (-30 to 55°C)

Altitude: 7500 ft (2286 m) maximum. Voltage derates at higher altitudes.

Humidity: 5 to 95% noncondensing (operating and storage)

Climate: Operation is prohibited in direct rain or snow.

CABLES SUPPLIED

- 150-ft (45.6-m) detachable, high-voltage shielded output cable on a reel with vice-grip clamps for the conductor and shield of the cable under test.
- 150-ft (45.6-m) 3-wire, No. 16 AWG, power input cord with standard cap. (NEMA 5-15P) 120 V on a storage reel with a duplex receptacle.
- 150-ft (45.6-m) No. 8 AWG, flexible ground cable on a storage reel with a vice-grip grounding clamp.

SAFETY FEATURES

The high-voltage output and input cables and the Arc Reflection Filter network are isolated from the chassis to reduce the possibility of transient voltages between the ARC REFLECTION FILTER CHASSIS GROUND (connects to STAR GROUND) and the LOCAL EARTH GROUND when impulsing. This reduces the possibility of current flow through other spurious paths and the possibility of damage to other equipment.

High-voltage cables are detachable.

An extra-tough jacket is provided on high-voltage output cable.

A special ground scheme maintains all operator accessible parts at the same potential.

Redundant grounds provide extra protection for operator.

Provision is made for an external safety interlock.

Low-voltage signal cable grounds are bonded to the ARC REFLECTION FILTER CHASSIS GROUND and isolated from SURGE GROUND.

Operator and electronic instruments are protected by redundant surge protection scheme.

OPERATING FEATURES

Internal MODE SELECTOR switch eliminates any need to interchange output connections manually.

Detachable, flexible, shielded output cable is specially terminated for long service life and convenience.

A large, removable hanger is mounted on the side for storage of the accessory cables.

An energy-absorbing discharge resistor provides for controlled charge dissipation of the filter capacitor and load.

The design adapts to station use or to installation in a vehicle such a van or trailer.

4

Description

SYSTEM OVERVIEW

The following is a brief functional description of each of the major elements of the arc reflection system and how they relate. See Figure 1 for a simplified block diagram of the system.

Arc Reflection Filter

The Arc Reflection Filter is a multifunction unit through which all system operations are performed. Different fault locating methods are implemented by setting the MODE SELECTOR switch on the Arc Reflection Filter to the appropriate position. When the switch is set to PROOF/BURN/IMPULSE, the Arc Reflection Filter is bypassed allowing for stand-alone operation of the impulse generator, proof tester, or dc burner. In addition, a wideband current transformer output is included, making the unit compatible with the surge pulse fault location method. When the switch is set to ARC REFLECTION TEST, the Arc Reflection Filter network is connected to the cable under test. In this mode, the operator can use the ART or TDR.

Dart Cable Analysis System

The Dart Cable Analysis System is a specialized TDR. When the MODE SELECTOR switch on the Arc Reflection Filter is set to ARC REFLECTION TEST, the Dart Cable Analysis System is connected to the cable under test. With the impulse generator turned off, the Dart Cable Analysis System operates like a normal TDR on the cable under test. With the impulse generator turned on, the Dart Cable Analysis System still functions like a TDR, but the impulse voltage causes the fault to become a short circuit. During the impulse time, when the low-voltage TDR pulse arrives at the fault, it is reflected back with negative polarity since the arc is nearly a short circuit. When the arc extinguishes, the Dart Cable Analysis System returns to displaying the same reflections as a normal TDR.

Impulse Generator

The impulse generator is a standard high-voltage impulse generator used in cable fault locating. With the MODE SELECTOR switch on the Arc Reflection Filter set to PROOF/BURN/IMPULSE, the impulse generator can be used to locate cable faults by the high voltage impulse method on cables rated up to 35 kV ac phase to phase (depending on the model of the impulse generator). In this mode, the system combines three related functions: dc proof testing, dc cable fault burning, and impulsing.

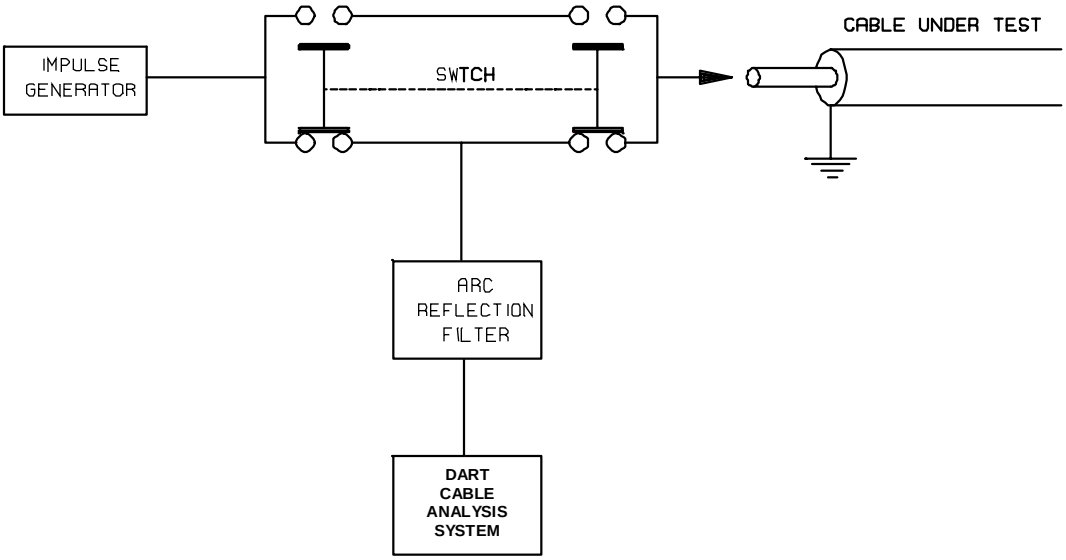

Figure 1: Simplified System Block Diagram

With the MODE SELECTOR switch on the Arc Reflection Filter set to ARC REFLECTION TEST, the impulse generator supplies energy to the Arc Reflection Filter. In this mode, the system can be used to locate cable faults by using the ART on cables rated up to 35 kV ac phase to phase.

ARC REFLECTION FILTER CIRCUIT DESCRIPTION

The Arc Reflection Filter has been designed for ease of serviceability. The following is a functional description of each of the major assemblies. See Figure 2 for a diagram of this circuit.

Interlock

The interlock circuitry provides for connection to an external interlock circuit. The interlock circuit comprises two microswitches, activated by cams on the MODE SELECTOR switch, a microswitch on the rear access panel, and the associated wires and connector. The circuit is a series of simple single-pole switches that are either open or closed. With the MODE SELECTOR switch in the ARC REFLECTION TEST position, switch S3 is closed. With the MODE SELECTOR switch in the PROOF/BURN/IMPULSE position, switch S2 is closed. When the rear access panel is closed, switch S4 is closed.

The interlock system has several purposes. The first purpose is to prevent energization of the Arc Reflection Filter when the MODE SELECTOR switch is not in the proper position; the interlock is open in between detent positions. The second purpose is to prevent energization of the filter when the rear access door is open and the high voltage terminals are exposed. The third purpose is to lock out operation of the PROOF/BURN mode of the impulse generator while the filter is in the ARC REFLECTION TEST mode because operation in this mode may damage the protection network. This interlock is compatible with all Megger impulse generators. The cable with the interlock plug (P2) mates with the interlock jack on the impulse generator. The shorting plug (P1) or an external interlock circuit must be used in the interlock jack (J1) to complete the daisy chain or the interlock circuit will prevent the system from being energized.

WARNING

While the interlock circuit of the Arc Reflection Filter is passive and does not generate any voltage, the external interlock circuit will have a voltage present. The voltage in the external interlock circuit may present a safety hazard if proper precautions are not used when interconnecting the interlocks. Failure to use the interlock circuit may cause damage to the Arc Reflection Filter and cable under test.

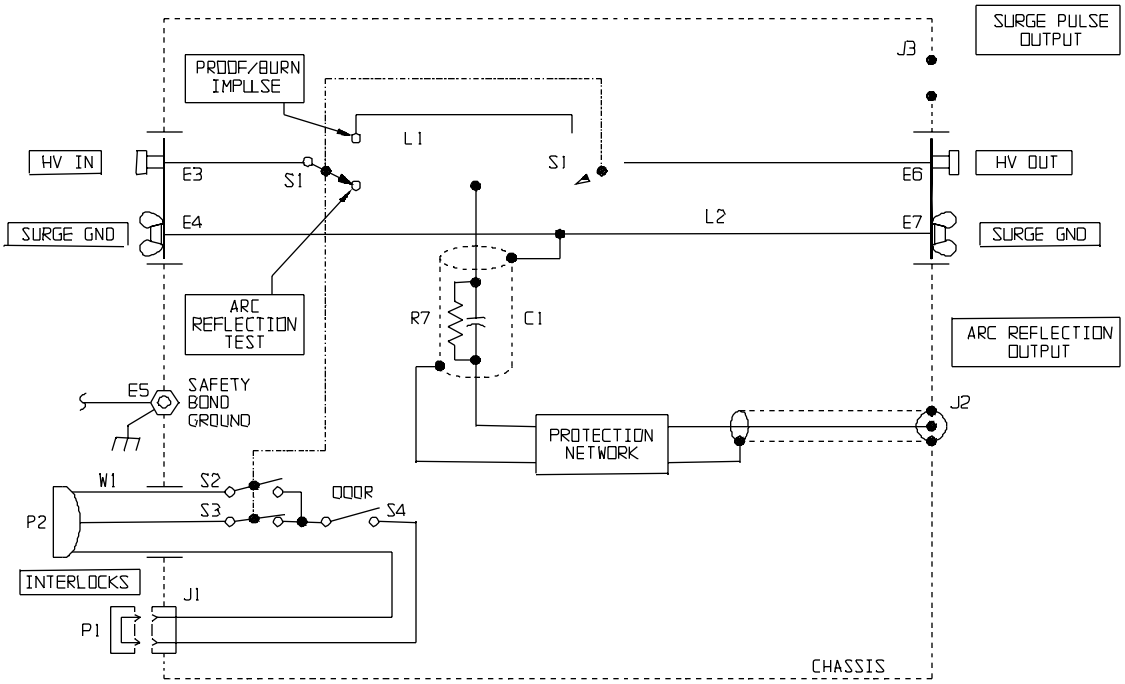

Figure 2: Arc Reflection Filter Circuit Diagram

Moving the MODE SELECTOR switch on the Arc Reflection Filter while the MODE SELECTOR switch of a Megger impulse generator is in the IMPULSE position will automatically cause the impulse generator to trip out and discharge the internal impulse capacitor.

CAUTION

This is not the recommended method for removing high voltage and may cause damage to the cable under test. Refer to Section 6 for the proper methods for switch transfer (Transfer Procedure).

Current Limiting Choke

The choke is only in use when the MODE SELECTOR switch is set to ARC REFLECTION TEST. This choke limits the amount of current supplied by the impulse generator. With the choke in the circuit, the total energy delivered to the fault remains the same; however, the current limiting causes the impulse to be stretched out in time. The stretching is accomplished by shaping the impulse into an exponentially damped sinusoid.

Discharge Assembly

The discharge assembly comprises twenty-two 10 MΩ resistors. This assembly provides a fail-safe discharge for the capacitor in the Arc Reflection Filter.

MODE SELECTOR Switch Assembly

CAUTION

Failure to set the MODE SELECTOR switch to PROOF/BURN/IMPULSE when performing the proof test or burn down may damage the Arc Reflection Filter.

The MODE SELECTOR switch permits the use of a single output cable eliminating the need for reconnecting the cable when changing from PROOF/BURN/IMPULSE to ARC REFLECTION TEST. The MODE SELECTOR switch is a large high-voltage switch which comprises moveable arms and two sets of fixed contacts. When set to PROOF/BURN/IMPULSE, this switch connects the impulse generator directly to the output cable. When set to ARC REFLECTION TEST, this switch inserts the choke in series with the output cable and impulse generator and connects the Arc Reflection Filter network to the output cable.

When the MODE SELECTOR switch is set to PROOF/BURN/IMPULSE or to ARC REFLECTION TEST, cams on the MODE SELECTOR switch shaft close the interlock switch. Moving the MODE SELECTOR switch on the Arc Reflection Filter while the MODE SELECTOR switch of a Megger impulse generator is in the IMPULSE position will automatically cause the impulse generator to trip out and discharge the internal impulse capacitor.

Wideband Current Transformer

A wideband current transformer measures the high-frequency impulse current in the ground return of the high-voltage output cable. The current transformer is provided for use in the surge pulse method of fault locating. This transformer is in the circuit in both the proof/burn/impulse and arc reflection test modes.

Protection Network

The protection network limits the output voltage from the ARC REFL OUTPUT BNC connector to safe levels. This circuit prevents damage to instruments connected to the ARC REFL OUTPUT BNC connector. During operation, the protection network emits a flash of light.

CAUTION

Any instrument connected to the ARC REFL OUTPUT should be capable of withstanding repetitive 125 V, wideband, high-energy impulses.

Filter Network Capacitor

WARNING

High-voltage capacitors can store hazardous levels of energy.

The filter network capacitor is located at the rear of the main assembly. The operating life of this capacitor is 200,000 impulses at 25 kV. If the capacitor is operated at voltages exceeding this level, the lifetime will be dramatically reduced, thus it is necessary to control any use of the capacitor at overvoltages. This capacitor is insulated by air and solid insulation from the chassis ground. The surge ground is connected to the capacitor and to the shield of the output cable.

5

Controls, Connectors, and Cables

IDENTIFICATION AND FUNCTION

The Arc Reflection Filter controls and connectors are shown in Figures 3, 4, and 5. Figure 3 shows a top view, Figure 4 shows a rear view and Figure 5 shows a side view.

The functions of the controls and connections shown in Figures 4, 5, and 6 are listed in Table 1. Some items are only included with certain catalog numbers.

Table 1: Controls and Connectors

Name	Function
MODE SELECTOR (S1):	Two-position switch for PROOF/BURN/IMPULSE or ARC REFLECTION TEST: selects mode of operation
INTERLOCK (J1):	Provision for external interlock. Compatible with Megger impulse generators. P1 is a shorting plug that terminates the interlock system at J1. Can be replaced by external user interlock system.
ARC REFL OUTPUT (J2):	BNC connector, low-voltage TDR signal interface between the Arc Reflection Filter and the Dart Cable Analysis System.
SURGE PULSE OUTPUT (J3):	BNC connector, low-voltage output signal from the wideband current transformer. Used in the surge pulse method.
INPUT CABLE:	User supplied cable that provides high-voltage impulses to the Arc Reflection Filter.
HV OUTPUT CABLE (W2):	150-ft (45.6-m) coaxial cable, the white lead is the high-voltage center conductor (red band); the black lead is the shield and low-voltage return (SURGE│ GROUND). Provides high-voltage impulse to system under test. Cable is contained on a reel.
GROUND CABLE (W3):	25-ft (7.6-m) insulated #8 AWG stranded conductor. Connects STAR GROUND to LOCAL│EARTH GROUND.

Name	Function
GROUND CABLE (W4):	4-ft (1.2-m) insulated #8 AWG stranded conductor. Connects IMPULSE GENERATOR CHASSIS GROUND to STAR GROUND.
GROUND CABLE (W5):	4-ft (1.2-m) insulated #8 AWG stranded conductor. Connects STAR GROUND to VEHICLE CHASSIS GROUND.
GROUND CABLE (W6):	28-in. (71-cm) insulated #8 AWG stranded conductor. Connects ARC REFLECTION FILTER CHASSIS GROUND to ANALYZER CHASSIS GROUND.
GROUND CABLE (W7):	28-in. (71-cm) insulated #8 AWG stranded conductor. Connects the ARC REFLECTION FILTER CHASSIS GROUND to STAR GROUND.
GROUND CABLE (W8):	12-ft (3.6-m) insulated #8 AWG stranded conductor. SAFETY GROUND cable that connects STAR GROUND to ground stud on cable reel containing 150-ft (45.6-m) SAFETY GROUND extension cable.
POWER CABLE (W9):	150-ft (45.6-m) insulated #16 AWG, 3 wire, stranded conductor, contained on reel with a duplex outlet. Provides means for supplying 120 V ac to the impulse generator and the Dart Cable Analysis System.
GROUND CABLE (W10):	150-ft (45.6-m) insulated #8 AWG stranded conductor. Connects system SAFETY GROUND to SPECIMEN GROUND. Cable is contained on a reel.
SIGNAL CABLE (W11):	3-ft (0.91-m) coaxial signal cable RG58.Provides signal path between Dart Cable Analysis System and Arc Reflection Filter.
ANALYZER POWER CORD (W12):	6-ft (1.82-m) insulated #16 AWG 3 wire, stranded conductor. Provides power to Dart Cable Analysis System.
INTERLOCK CABLE (W1):	Cable used to connect the interlock circuitry of the Arc Reflection Filter into the interlock circuitry of the impulse generator. The interlock plug (P2) mates with the interlock jack on Megger impulse generators.
HV OUT:	Output terminal used to connect the high-voltage center conductor of the HV OUTPUT CABLE to the Arc Reflection Filter.
HV IN:	Input terminal used to connect the high-voltage center conductor of the impulse generator to the Arc Reflection Filter.
SURGE GND:	Input terminals (2) used to connect the low-voltage returns (SURGE GROUNDS) of the high-voltage input and output cables to the Arc Reflection Filter.

Name	Function
INTERLOCK SHORT:	Connector used to terminate the end of the interlock daisy chain (J1). A mating shorting plug (P1) is provided with a shorting wire in the event that a test area interlock is not used. It is suggested that the customer remove the short circuit from the plug and that the plug be connected to a suitable test area interlock system. The system must be constructed so that the interlock switches are closed when the test area gate or gates are closed. The interlock wiring must be run as a twisted pair to minimize electromagnetic coupling into the system. This inter-lock system should be connected to pins A and B on plug (P1). When the interlock loop is opened, the test is automatically terminated.
GROUND:	Wing nut located on the rear of the Arc Reflection Filter. This ground is referred to as the ARC REFLECTION FILTER CHASSIS GROUND and is defined in the following section.

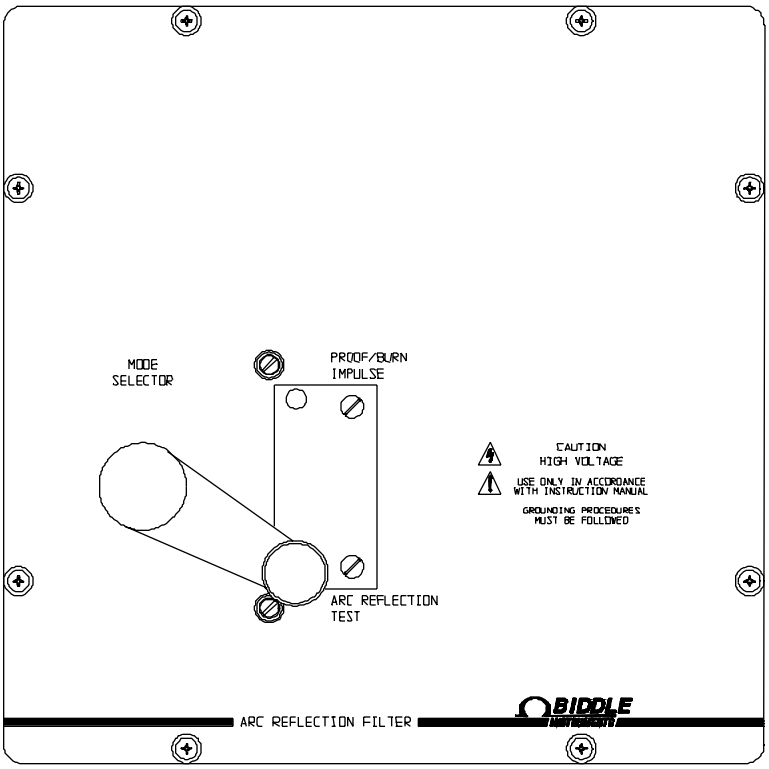

Figure 3: Control Panel

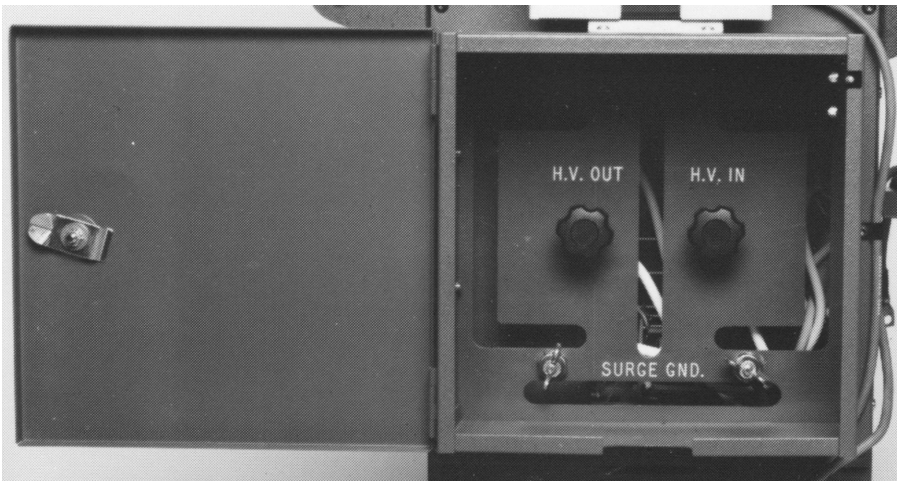

Figure 4: Rear View of Arc Reflection Filter

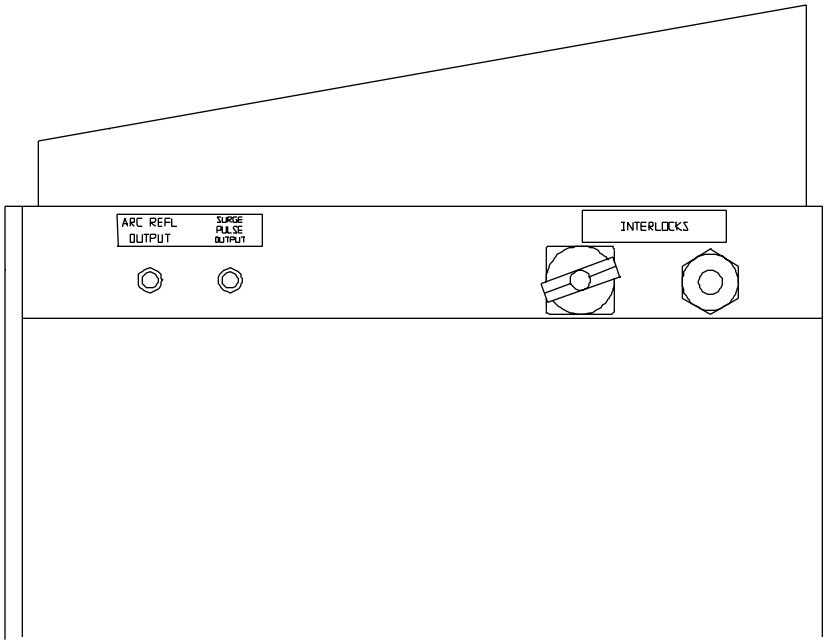

Figure 5: Side View of Arc Reflection Filter

GROUNDING SYSTEM AND HV CONNECTIONS

WARNING

Grounding systems and procedures contained in this manual are designed specifically for Megger equipment. If other manufacturer's equipment is used in conjunction with the Arc Reflection Filter, it is the responsibility of the user, paying careful attention to safety, to verify that grounding and interconnections between the systems are made in accordance with each manufacturer's specific instructions. Incompatible grounding systems may prove hazardous.

Safe operation of an Arc Reflection system requires strict adherence to the recommended grounding procedure. While it may seem that simple ground connections are adequate, under surge conditions the system grounds may develop hazardous voltages. To minimize the possibility of hazardous voltages occurring under all foreseeable operating conditions, all of the ground connections in this system are essential and must be made using firm low resistance connections capable of carrying large surge currents. There are numerous grounds in a fully configured Arc Reflection system; some are permanently connected when the system is installed while others are made each time a test is performed. The following definitions explain each of the system grounds shown in Figures 7 and 8.

Permanent Grounds and Connections

The permanent grounds and connections in the system are made when the system is installed. During system installation, the integrity of all permanent connections should be checked.

1. The STAR GROUND is the central ground point of the system and is used as the permanent connection point for other grounds in the system. This grounding point is supplied by the user and often is a connection point on the vehicle used to transport the equipment. The STAR GROUND should be located near the rear of the Arc Reflection Filter chassis. See Figure 6. In the case where the vehicle chassis is used as the STAR GROUND, there is no need to make the ground connection referred to as VEHICLE CHASSIS GROUND since this connection is already made.

2. The IMPULSE GENERATOR CHASSIS GROUND is permanently connected from the ground lug on the impulse generator to STAR GROUND when the system is installed. This connection is made using GROUND CABLE (W4). This ground is used to maintain the impulse generator chassis at the same potential as the other accessible parts in the system. See Figure 6.

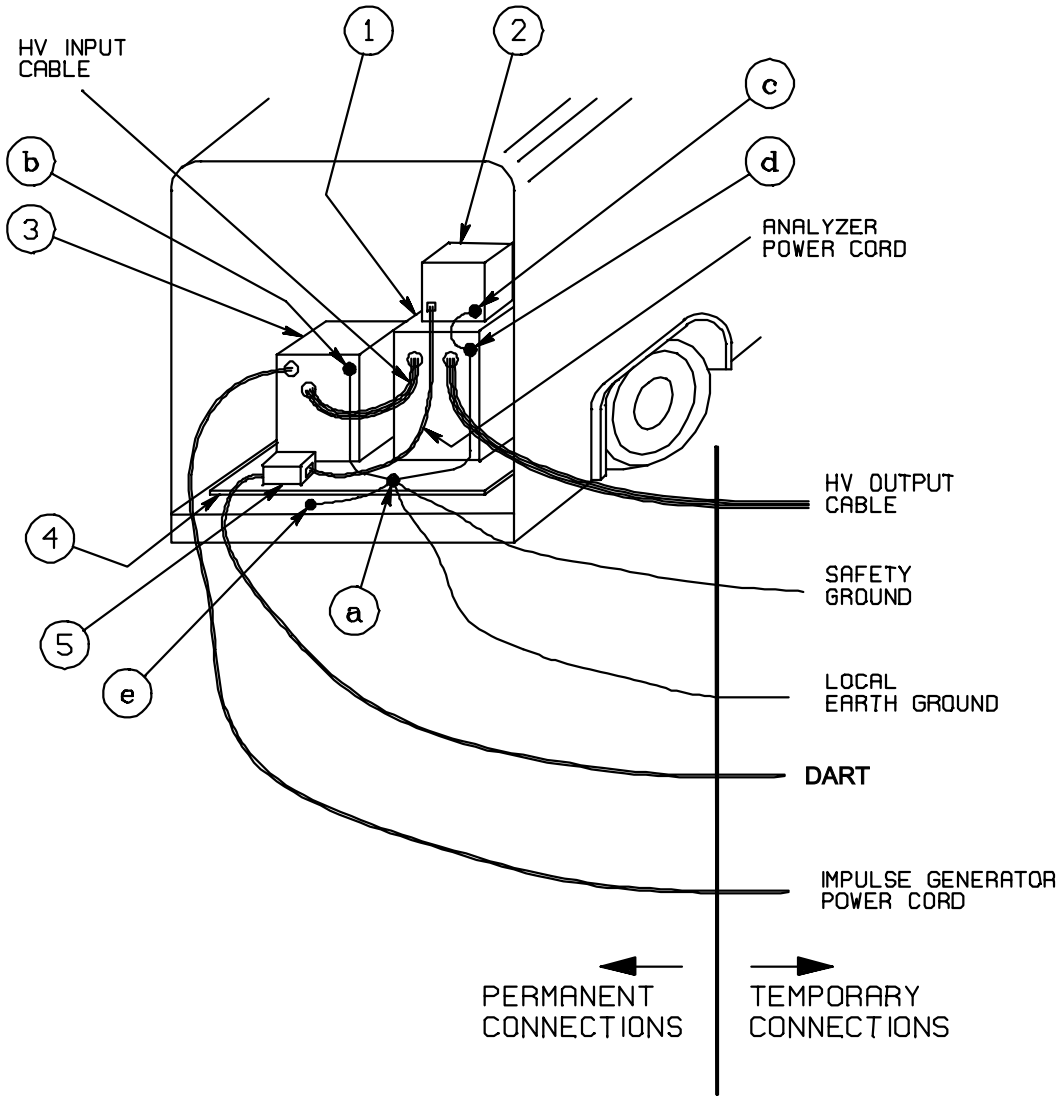

Key to Figure 6

System Components	Permanent Grounds
1. Arc Reflection Filter	a. STAR GROUND
2. Dart Cable Analysis System	b. IMPULSE GENERATOR CHASSIS GROUND
3. Impulse Generator	c. DART CHASSIS GROUND
4. Pallet	d. ARC REFLECTION FILTER CHASSIS GROUND
	e. VEHICLE CHASSIS GROUND

Figure 6: Ground System Diagram, Permanent Connections

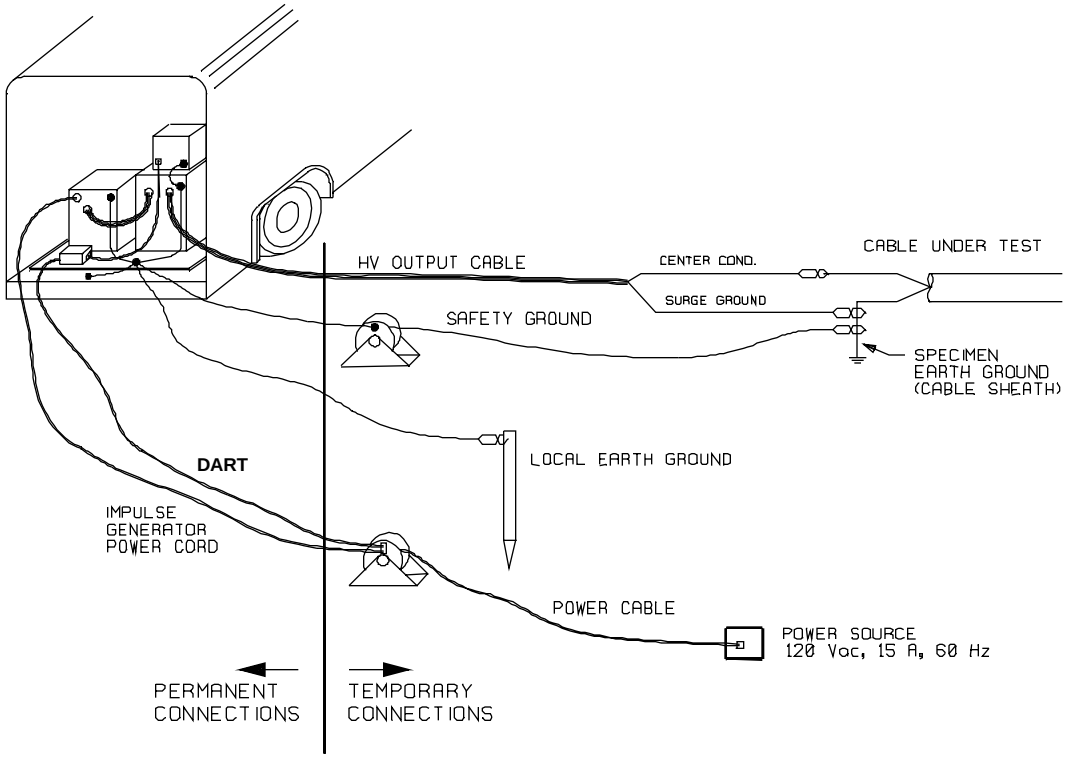

Figure 7: Ground System Diagram, Temporary Connections

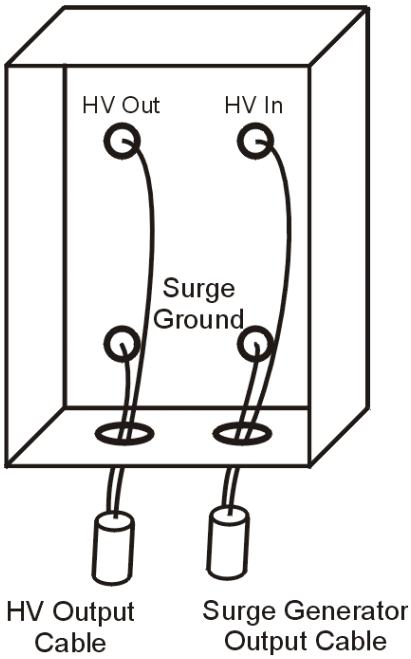

Figure 8: High-Voltage Connections

3. The Dart is permanently connected from the ground lug on the Dart Cable Analysis System to the ground lug on the Arc Reflection Filter. This ground connection is made using GROUND CABLE (W6). This ground is used to maintain the Dart Cable Analysis System chassis at the same potential as the other accessible parts in the system. See Figure 6.

4. The ARC REFLECTION FILTER CHASSIS GROUND is permanently connected from the ground lug on the Arc Reflection Filter to STAR GROUND when the system is installed. This ground connection is made using GROUND CABLE (W7). This ground is used to maintain the Arc Reflection Filter chassis at the same potential as the other accessible parts in the system. See Figure 6.

5. The VEHICLE CHASSIS GROUND is permanently connected from a lug (user supplied) on the vehicle chassis to STAR GROUND when the system is installed in a vehicle (trailer). This ground connection is made using GROUND CABLE (W5). This ground is used to maintain the vehicle chassis (and vehicle body) at the same potential as the other accessible parts in the system. Alternatively, the VEHICLE CHASSIS GROUND may be chosen as the STAR GROUND of the system. In this case, all connections that would normally be made to STAR GROUND would be to the VEHICLE CHASSIS GROUND and GROUND CABLE (W5) would not be needed. See Figure 6.

6. The INPUT SURGE GROUND is the high-voltage return lead of the impulse generator being used. This ground is not supplied with the Arc Reflection Filter, but is part of the impulse generator that is used with the Arc Reflection system. The INPUT SURGE GROUND is connected to one of the terminals (wing nuts) inside the rear access panel of the Arc Reflection Filter labeled SURGE GND. See Figure 8.

7. The INPUT HV LEAD is the high-voltage conductor of the impulse generator being used. This cable is not supplied with the Arc Reflection Filter, but is part of the impulse generator that is used with the Arc Reflection system. The INPUT HV LEAD is connected to the terminal inside the rear access panel of the Arc Reflection Filter labeled HV IN. See Figure 8.

8. SURGE GROUND refers to any part of the high-voltage return path. The SURGE GROUND is the shield of the 150-ft (45.6-m) HV OUTPUT CABLE (W2) contained on the reel. The current in this return path can exceed 10,000 A and can be hazardous if not insulated.

Temporary Grounds and Connections

Each time the Arc Reflection system is operated, several connections must be made. These temporary connections are described in the following.

1. The LOCAL EARTH GROUND connection is made prior to each test. One end of the 25-ft (7.6-m) LOCAL EARTH GROUND cable is permanently connected to STAR GROUND. The other end has a clamp that is connected to a nearby driven earth ground referred to as the LOCAL EARTH GROUND. This ground connection is made using GROUND CABLE (W3). The purpose of this ground is to maintain the area surrounding the vehicle at the same potential as the vehicle. The driven ground should have a low impedance (less than 5 Ω) and should be located as near to the vehicle as practical. See Figure 7.

2. The SPECIMEN GROUND is the ground conductor (sheath) of the cable under test. This ground should be bonded to earth through a driven ground with a low resistance (less than 5 Ω). It is assumed that any cable under test is inherently connected to earth through a driven ground. If the cable under test is not bonded to earth in this fashion, a separate bond must be made and must have an impedance less than 5 Ω. See Figure 7.

3. The SAFETY GROUND connection is made prior to each test. One end of the 12-ft (3.6-m) portion of the SAFETY GROUND cable is permanently connected to STAR GROUND using GROUND CABLE (W8). The other end has a slotted lug which connects to the ground stud (with wing nut) on the reel containing the 150-ft (45.6-m) SAFETY GROUND extension cable (#8 AWG). The other end of the 150-ft (45.6-m) SAFETY GROUND extension cable has a clamp that is connected to the SPECIMEN GROUND. The 150-ft (45.6 m) SAFETY GROUND extension cable is GROUND CABLE (W10). This ground is used to force the potential of the system to remain at the potential of the SPECIMEN GROUND. This ground carries little, if any, current; however, should a failure occur in the SURGE GROUND of the test system, the conductor of the SAFETY GROUND is sized to handle the current. The connection of SAFETY GROUND at SPECIMEN GROUND is the only point in the system where SURGE GROUND and the system chassis grounds are connected. See Figure 7.

4. The SURGE GROUND TEST LEAD connection is made prior to each test. The SURGE GROUND TEST LEAD is connected to the SPECIMEN GROUND prior to the test using the vise-grip clamp at its end. The SURGE GROUND TEST LEAD is the shield of the coaxial high-voltage output cable and is isolated from the other system grounds except at the SPECIMEN GROUND point. The SURGE GROUND TEST LEAD is the black lead terminated with a vice-grip clamp. This ground connects to the Arc Reflection Filter terminal labeled SURGE GND as described in (e) and provides the return path for the high-current surge pulse to the impulse capacitor. See Figure 7.

5. The OUTPUT SURGE GROUND connection is made prior to each test. The OUTPUT SURGE GROUND is connected to the Arc Reflection Filter prior to the test. The OUTPUT SURGE GROUND is the shield of the 150-ft (45.6-m) coaxial high-voltage output cable described in (d) but is located at the other end of the cable and is a black lead terminated with a lug. This ground is connected to the Arc Reflection Filter terminal, inside the rear access panel, labeled SURGE GND and provides the return path for the high-current surge pulse to the impulse capacitor. See Figure 8.

WARNING

Dangerous voltages develop on the SURGE GROUND conductor so it must remain isolated from other grounds except at the SPECIMEN GROUND point. Tears or breaks in the insulating jacket of the high-voltage output cable expose the SURGE GROUND and pose a safety hazard to the operator.

6. The OUTPUT HV LEAD connection is made prior to each test. The OUTPUT HV LEAD is the high-voltage conductor of the 150-ft (45.6-m) coaxial high-voltage output cable and is located at the same end as the OUTPUT SURGE GROUND TEST LEAD. The OUTPUT HV LEAD is a white lead terminated with a lug and is connected to the terminal inside the rear access panel labeled HV OUT. See Figure 8.

7. The HV TEST LEAD connection is made prior to each test. The HV TEST LEAD is the high-voltage conductor of the 150-ft (45.6-m) coaxial high-voltage output cable and is located at the same end as the SURGE GROUND. The HV TEST LEAD is a white lead terminated with a vise-grip clamp and is connected to the high-voltage conductor of the cable under test. See Figure 7.

8. The POWER GROUND is the third (green) wire of the power cords that supply system power (120 V ac). The POWER GROUND connection is made at the source of power for the system. The power cord must be connected to a power source that has a high rupture fuse or circuit breaker with a current rating not to exceed 15 A. The ground of the power source must have a low impedance connection to earth (less than 5 Ω). The POWER GROUND takes several paths:

- The third (green) wire of the power cord for the Dart Cable Analysis System; the 6-ft (1.82-m) cable designated POWER CORD (W12).
- The third (green) wire of the power cord for the impulse generator. This cord plugs into the duplex outlet of the power cable reel (W9).
- The third (green) wire of the 150-ft (45.6-m) power cable (W9) with duplex outlet; the 150-ft (45.6-m) cable designated POWER CABLE.

9. The SAFETY GROUND JUMPER is a temporary ground connection that provides protection for the operator. The SAFETY GROUND JUMPER is not supplied with the system. Prior to connecting the system to the cable under test, the operator must use a SAFETY GROUNDING STICK to ground all exposed conductors and then connect a SAFETY GROUND JUMPER cable from the high-voltage conductor of the cable under test to the SPECIMEN GROUND. The SAFETY GROUND JUMPER is only removed during actual testing. After completion of testing the SAFETY GROUND JUMPER must be promptly replaced and remain in place until the entire test system is disconnected. The SAFETY GROUND JUMPER is always the first test connection made and the last test connection removed.

WARNING

Failure to use a SAFETY GROUND JUMPER can result in operator accessible portions of the test system developing dangerous voltages should the cable under test become accidentally energized.

6

Installation and Setup

SAFETY PRECAUTIONS

- Read Section 2, Safety, of this manual.
- Misuse of this high-voltage equipment can be extremely dangerous.
- Equipment to be tested must be disconnected from power.
- Personnel must be kept clear of bare live parts.
- Follow recommended grounding procedures and all other safety precautions.

INSTALLATION IN A VEHICLE

The Arc Reflection Filter is supplied with wheels and a resting foot to make it portable; however, in many instances, it may be desirable to permanently mount the Arc Reflection Filter in a vehicle. Two simple mounting methods use the steel tubes that form the feet of the Arc Reflection Filter chassis. A dimensional drawing of the bottom of the Arc Reflection Filter is shown in Figure 9.

The first method uses four short steel dogs (not supplied) that clamp the unit into the floor of the vehicle. Each dog is inserted into an end of the steel tubes and then bolted into the floor of the vehicle.

The second method uses two steel bars (not supplied) that clamp the unit into the floor of the vehicle. Each bar is inserted through the steel tubes so that the ends of the bar protrude on both sides. The bar is then bolted into the floor of the vehicle.

To install the Arc Reflection Filter in a vehicle, perform the following steps.

1. Choose a method for mounting, obtain the hardware, and prepare the vehicle for mounting the Arc Reflection Filter by drilling the appropriate holes.
2. Remove the wheels and resting foot from the Arc Reflection Filter chassis. Mount the Arc Reflection Filter into the vehicle.

WARNING

Failure to fasten down the Arc Reflection Filter in the vehicle can be extremely dangerous for the driver and passengers of the vehicle and also may result in damage to the system.

3. Provide a permanent connection point in the vehicle to connect all grounds to; this connection point is called STAR GROUND.

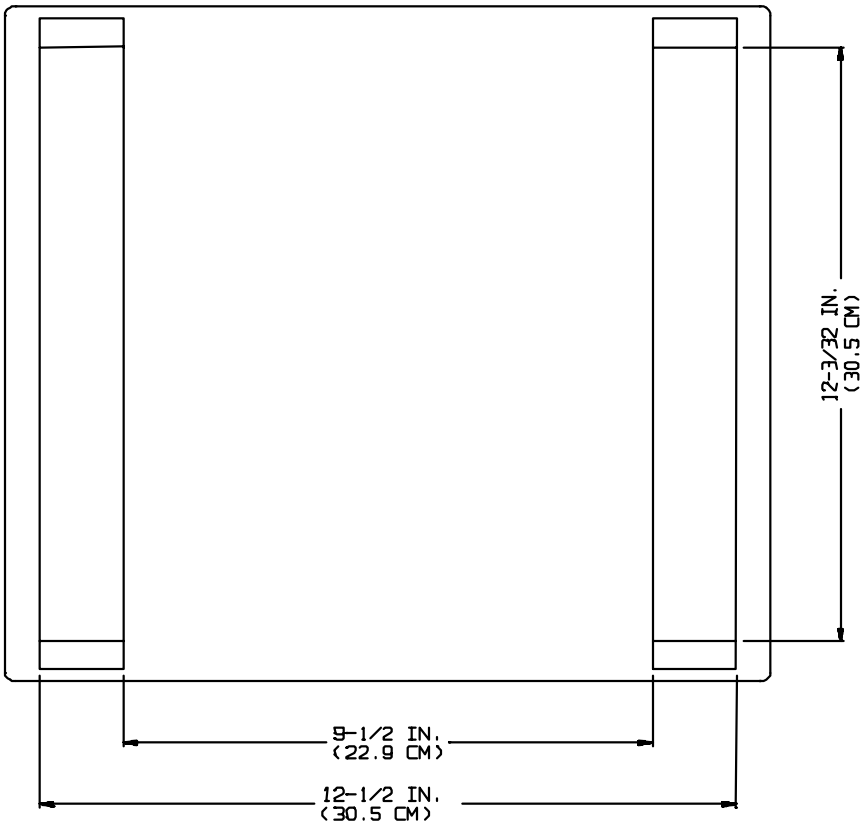

Figure 9: Dimensional Drawing, Bottom View

Connect the following grounds (defined in Section 5) to STAR GROUND:

a. IMPULSE GENERATOR CHASSIS GROUND, use the 4-ft (1.2-m) GROUND CABLE (W4)

b. ARC REFLECTION FILTER CHASSIS GROUND, use the 28-in (71-cm) GROUND CABLE (W7)

c. SAFETY GROUND cable, use the 12-ft (3.6-m) GROUND CABLE (W8)

d. VEHICLE CHASSIS GROUND, use the 4-ft (1.2-m) GROUND CABLE (W5)

e. LOCAL EARTH GROUND cable, use the 25-ft (7.6-m) GROUND CABLE (W3)

WARNING

Failure of the grounding system can be extremely dangerous. Before operating, check the integrity of all permanent grounds.

NOTE

Depending upon the operator's choice during installation, VEHICLE CHASSIS GROUND may also be STAR GROUND; i.e., STAR GROUND is connected directly to the vehicle chassis. In this case, there is no reason to make the connection in 4d. In steps 4c and 4e only one end of the designated cable is connected (to STAR GROUND), the other end is for temporary connection during test.

4. Connect the INPUT HV LEAD (the high-voltage output lead of the impulse generator) to the HV IN terminal inside the rear access panel of the Arc Reflection Filter.

5. Connect the INPUT SURGE GROUND (the high-voltage return lead of the impulse generator) to one the SURGE GND terminals inside the rear access panel of the Arc Reflection Filter.

CAUTION

Connections made, while considered permanent, may loosen or corrode with age. Check all permanent ground connections for loosening and corrosion prior to system operation.

SETUP PROCEDURE

WARNING

Misuse of this equipment can be extremely dangerous. Before operating, read Section 2 and all other safety descriptions contained in this manual.

1. Observing all safety precautions, be sure all equipment is de-energized. Identify the faulted cables, obtain access to both ends, and erect barriers.
2. Discharge cable under test by applying a ground using a SAFETY GROUNDING STICK (not supplied). Connect a SAFETY GROUND JUMPER (not supplied) from the high-voltage conductor of the cable under test to the SPECIMEN GROUND (the ground conductor of the cable under test).

WARNING

Failure to apply a SAFETY GROUND JUMPER to the cable under test prior to system connection can be extremely dangerous.

3. Choose a location that meets the following conditions:
   a. Locate the vehicle so that it can be safely parked; set the brakes or block the wheels.
   b. An electrical service suitable for the system must be available within 150 ft (45.6 m) of the chosen location, unless a longer cable option is included or if the system includes a motor-driven generator. If the 150-ft (45.6 m) power cord is used, the service ground wire must be connected to a secure low-resistance ground (less than 5 Ω). The power source must be 120/240 V ac, 50/60 Hz and must have a high rupture fuse or circuit breaker with rating not to exceed 15/7.5 A.
   c. A secure low-resistance ground (less than 5 Ω) must be located within 20 ft (6 m) of the vehicle. A driven ground is often used. This ground is called the LOCAL EARTH GROUND and is used to maintain the surrounding area at the same potential as the test system.
   d. The location should be as dry as possible.
   e. There should be no flammable material stored in the vicinity.
   f. There should be adequate ventilation in the test area.
   g. Set up suitable safety barriers to protect the operator from traffic hazards and to prevent intrusion by unauthorized personnel. An interlock circuit designed to shut off input power automatically upon unauthorized entry into the high-voltage area has been provided. Warning lights are recommended.

h. Both the high-voltage conductor and shield of the cable under test must be accessible.

4. After a satisfactory location has been selected, connect the STAR GROUND of the system to the LOCAL EARTH GROUND using GROUND CABLE (W3). One end of this cable was permanently attached to STAR GROUND in installation step 4e.

5. Verify that a connection is made between the VEHICLE CHASSIS GROUND and STAR GROUND.

6. Connect the 150-ft (45.6-m) SAFETY GROUND as follows.

   a. Be sure that the SPECIMEN GROUND (grounded shield of the cable under test) connection is a secure low-resistance ground (less than 5 Ω).

   b. Extend the 150-ft (45.6-m) SAFETY GROUND, GROUND CABLE (W10), from the Arc Reflection System to the cable under test.

   c. Connect STAR GROUND to the 150-ft (45.6-m) SAFETY GROUND extension cable reel using the 12-ft (3.6-m) cable designated GROUND CABLE (W8). One end of the 12-ft (3.6-m) cable was permanently connected to STAR GROUND in installation step 4c. A wing nut is provided on the reel for this purpose.

   d. Connect the 150-ft (45.6-m) SAFETY GROUND, GROUND CABLE (W10), to the SPECIMEN GROUND (grounded shield of the cable under test).

7. Connect the 150-ft (45.6-m) HV OUTPUT CABLE (W2) as follows.

   a. Extend the 150-ft (45.6-m) HV OUTPUT CABLE (W2), from the Arc Reflection System to the cable under test.

   b. Connect the OUTPUT SURGE GROUND, to the terminal labeled SURGE GND inside the rear access panel of the Arc Reflection Filter. This is the black lead of the HV OUTPUT CABLE terminated with a lug.

   c. Connect the OUTPUT HV LEAD to the terminal labeled HV OUT inside the rear access panel of the Arc Reflection Filter. This is the white lead of the HV OUTPUT CABLE terminated with a lug.

   d. Connect SURGE GROUND TEST LEAD to the SPECIMEN GROUND (grounded shield of the cable under test). This is the black lead terminated with a vise-grip clamp.

WARNING

Do not extend the SURGE GROUND TEST LEAD.

   e. Connect the HV TEST LEAD to the faulted high-voltage conductor of the cable under test. This is the white lead terminated with a vise-grip clamp. Be sure that the exposed conductor and clamp are sufficiently

insulated to withstand the test voltage; 6-in. (15 cm) clearance is adequate for 25 kV.

8. Connect any other conductors of the cable under test to the SPECIMEN GROUND making firm short connections.

9. Remove the SAFETY GROUND JUMPER applied in step 2. Ensure that:

- The main switch of the impulse generator is set to OFF.
- The rear access panel of the Arc Reflection Filter is closed.
- The MODE SELECTOR switch of the impulse generator is set to GROUND.
- The MODE SELECTOR switch of the Arc Reflection Filter is set to PROOF/BURN/IMPULSE or ARC REFLECTION TEST.
- The OUTPUT VOLTAGE CONTROL of the impulse generator is set to zero (Zero Start).

10. Connect the 150-ft (45.6-m) power input cable (W9) to the service outlet.

11. Connect the power cord of the DART to the duplex outlet on the power cable reel.

12. Connect the power cord of the impulse generator to the duplex outlet on the power cable reel.

13. For vehicles having a motor-driven generator:

    a. Make sure that the ground and neutral of the generator are securely tied to the machine frame and to the VEHICLE CHASSIS GROUND. Be sure that the VEHICLE CHASSIS GROUND is connected to STAR GROUND.

    b. Start the engine-generator and warm up sufficiently to ensure normal stable operation.

    c. Check the engine-generator voltage to ensure proper output voltage.

    d. Connect the power cord of the DART to the generator.

    e. Connect the power cord of the impulse generator to the generator.

CAUTION

Improper voltage levels may damage the Dart Cable Analysis System and DART.

14. Operation from a portable engine-generator:

    a. Locate the engine-generator in a well-ventilated area at least 10 ft (3 m) from the test system.

    b. Store spare fuel in a suitable safety container well away from both the engine-generator and the test system.

c. Provide a ground bond between the engine-generator frame and a local secure low-resistance ground (less than 5 Ω). Be sure that the green neutral wire is grounded. These leads should be no longer than 25 ft (7.6 m) and should be equivalent to No. 8 AWG or larger.

d. Start the engine-generator and warm up sufficiently to ensure normal stable operation.

e. Check the engine-generator voltage to ensure proper output voltage.

f. Connect the power cord of the DART to the generator.

g. Connect the power cord of the impulse generator to the generator.

WARNING

Be careful when refueling an engine-generator to avoid fire. Do not refuel while running.

When these procedures have been completed, the test may be conducted in accordance with the procedures given in Section 7.

PRELIMINARY CHECK

Be sure to read and understand Section 2, Safety, before operating this system. To verify that properly bonded connections have been made, perform the following procedure:

WARNING

This procedure does not test the integrity of the driven grounds. Separate tests must be performed using ground testing equipment. This test only determines whether the test system is properly bonded to the cable under test.

1. Ensure that the Setup Procedure in this section has been performed.
2. Ensure that the SAFETY GROUND JUMPER between the high-voltage conductor and the shield (SPECIMEN GROUND) of the cable under test remains in place for this test.
   a. The SAFETY GROUND JUMPER must be connected directly to the conductors of the cable under test.
   b. This test checks the test system bonds to the cable under test. The HV TEST LEAD and SURGE GROUND TEST LEAD connections to the cable under test must be connected directly to the conductors of the cable under test at positions different than those used for the SAFETY GROUND JUMPER. Direct contact of the SAFETY GROUND JUMPER to the HV TEST LEAD or the SURGE GROUND TEST LEAD defeats the purpose of the bonding test. Contact of the SAFETY GROUND JUMPER to the HV TEST LEAD or SURGE GROUND TEST LEAD should only be through the conductors of the cable under test.
3. Temporarily disconnect the 150-ft (45.6-m) SAFETY GROUND, GROUND CABLE (W10), from the SPECIMEN GROUND.
4. The connections made in step 2 complete a low-resistance path from the high-voltage output cable, through the high-voltage conductor of the cable under test, through the SAFETY GROUND JUMPER, through the ground conductor (shield) of the cable under test (SPECIMEN GROUND), through the SURGE GROUND back to the high-voltage power supply of the test system.
5. Set the MODE SELECTOR switch on the Arc Reflection Filter to either position.
6. Set the MODE SELECTOR switch on the impulse generator to PROOF/BURN.
7. Set the OUTPUT VOLTAGE CONTROL on the impulse generator firmly to zero.

8. Set the AMMETER RANGE switch on the impulse generator to its highest range.
9. Set the POWER circuit breaker on the impulse generator to ON.
10. Slowly raise the test voltage being careful not to exceed 500 V on the kilovoltmeter. Continue to increase the test voltage until either the milliammeter reaches its maximum or the kilovoltmeter reaches 500 V. With a maximum current reading and an output voltage of 500 V or less, the proper bonding of the test system connections to the cable under test has been established and the required high-voltage testing may be performed.

WARNING

Do not continue testing if the current or voltage requirement is not met. This is an indication that the bonding of the connection is inadequate.

11. Set the OUTPUT VOLTAGE CONTROL on the impulse generator to zero.
12. Set the POWER circuit breaker on the impulse generator to OFF.
13. Set the MODE SELECTOR switch of the impulse generator to GROUND.
14. Reconnect the SAFETY GROUND, GROUND CABLE (W10), to the sheath of the cable under test (SPECIMEN GROUND).
15. Remove the SAFETY GROUND JUMPER.
16. Proceed with the required testing.

TRANSFER PROCEDURE

Follow this procedure when transferring modes of operation.

CAUTION

Never move the MODE SELECTOR switch on either the impulse generator or Arc Reflection Filter during a test because shutdown will occur and damage could result. Failure to follow proper shutdown or transfer procedures may result in damage to the cable under test or test system.

1. If transfer is desired from the proof/burn mode on the impulse generator, turn the OUTPUT VOLTAGE CONTROL fully counterclockwise, then turn the POWER circuit breaker on the impulse generator to OFF.

   For Megger units, this will automatically operate the discharge assembly and reduce the output voltage. Wait for the high voltage to discharge to less than 1 kV. This is indicated by the front panel voltmeter. This meter has a passive measuring circuit which means that the meter will operate normally even though the main power has been turned OFF. The MODE SELECTOR switches on either the impulse generator or Arc Reflection Filter may now be moved to another position.

2. If transfer is desired from the proof/burn/impulse mode or the arc reflection test mode while in the proof/burn mode on the impulse generator, turn the OUTPUT VOLTAGE CONTROL fully counterclockwise, then turn the POWER switch to OFF.

   For Megger units, this will automatically operate the discharge assembly and reduce the output voltage. Wait for the high voltage to discharge to less than 1 kV. This is indicated by the front panel voltmeter. This meter has a passive measuring circuit which means that the meter will operate normally even though the main power has been turned OFF. The MODE SELECTOR switches on either the impulse generator or Arc Reflection Filter may now be moved to another position.

3. If transfer is desired from the impulse mode on the impulse generator, turn the OUTPUT VOLTAGE CONTROL fully counterclockwise, allow the impulse switch to operate once, then turn the POWER switch to OFF.

   For Megger units, this will automatically operate the discharge assembly and reduce the voltage. Wait for the high voltage to discharge to less than 1 kV. This is indicated by the front panel voltmeter. This meter has a passive measuring circuit which means that the meter will operate normally even though the main power has been turned OFF. The MODE SELECTOR switches on either the impulse generator or Arc Reflection Filter may now be moved to another position.

4. If transfer is desired from the proof/burn/impulse mode or the arc reflection test mode while in the impulse mode on the impulse generator, turn the OUTPUT VOLTAGE CONTROL fully counterclockwise, allow the impulse switch to operate once, then turn the POWER switch to OFF.

   For Megger units, this will automatically operate the discharge assembly and reduce the voltage. Wait for the high voltage to discharge to less than 1 kV. This is indicated by the front panel voltmeter. This meter has a passive measuring circuit which means that the meter will operate normally even though the main power has been turned OFF. The MODE SELECTOR switches on either the impulse generator or Arc Reflection Filter may now be moved to another position.

DISCHARGE OF CABLE AND SHUTDOWN PROCEDURE

When a cable becomes charged, either because the fault has failed to break down or is still partially charged from proof testing, it must be discharged before being handled.

1. Turn the OUTPUT VOLTAGE CONTROL on the impulse generator fully counterclockwise.

2. If the impulse generator is in the impulse mode, wait for the impulse switch to close once and then turn OFF the POWER circuit breaker on the impulse generator. For Megger units, this will remove input power and automatically place discharge resistors on the output load and the impulse capacitor.

   If the impulse generator is in the proof/burn mode, turn OFF the POWER circuit breaker. For Megger units, this will remove input power and automatically place discharge resistors on the output load.

3. Wait for the high voltage to discharge to less than 1 kV. This is indicated by the front panel voltmeter on the impulse generator. For Megger units, this meter has a passive measuring circuit which means that the meter will operate normally even though the main power has been turned OFF.

4. Set the MODE SELECTOR switch of the impulse generator to GROUND.

CAUTION

Do not, except in an emergency, place the MODE SELECTOR switch of the impulse generator in the GROUND position with the output voltage above 1 kV. This may damage the instrument and cable under test.

5. With the MODE SELECTOR switch of the impulse generator set to GROUND, perform the following safety check:

   a. Check that the voltmeter reads zero.

b. For Megger units, visually check the position of the moving arms on the MODE SELECTOR switch through the viewing window to be sure they are in the GROUND position. When properly grounded, the moving arms will be engaged in the large ground bar electrode.

6. For safety during a temporary or permanent shutdown, disconnect the power cable (W10) from the source.

7. Using a SAFETY GROUNDING STICK, ground all exposed high-voltage connections. Connect SAFETY GROUND JUMPERS from all exposed high-voltage connections to SPECIMEN GROUND.

8. Remove the test clamps from the faulted high-voltage conductor and from the SPECIMEN GROUND, leaving the SAFETY GROUND JUMPER in place to drain any relaxation charge.

WARNING

To make sure that the cable is completely discharged, the temporary SAFETY GROUND JUMPER should be kept in place for at least four times as long as the test voltage was applied to the cable.

9. Connect the HV TEST LEAD of the test system to the SURGE GROUND TEST LEAD for safety during storage.

7

Maintenance

ROUTINE MAINTENANCE

The Arc Reflection Filter is constructed to withstand use normally encountered in field testing for public utilities and industrial plants. To maintain this equipment in proper condition, a planned program of routine maintenance for all major components should be carried out every six months. In abnormally dirty areas or in difficult environments, the routine maintenance schedule may be required more often than the average six-month period.

WARNING

This is a high-voltage system which can produce and contain dangerous voltages. Any service or repair of this equipment should be performed only by qualified persons who are aware of high-voltage hazards and the necessary precautions routinely taken to prevent injury.

Before any inspection, service, or repair, the system must be completely disconnected from the power supply and from any cable under test. The MODE SELECTOR switch of the Arc Reflection Filter must be set to ARC REFLECTION TEST. The MODE SELECTOR switch on the impulse generator must be set to GROUND and must remain in this position for at least 15 minutes before access is gained to the interior of the Arc Reflection Filter.

WARNING

The impulse capacitors can produce and contain dangerous voltages. Any service or repair of equipment containing an impulse capacitor should be performed only by qualified persons who are aware of high-voltage hazards and the necessary precautions routinely taken to prevent injury. When it is necessary to touch the terminals of any of the capacitors, all terminals of the capacitor should be grounded using a SAFETY GROUNDING STICK and then bonded together with SAFETY GROUND JUMPERS, before any connections are removed from the capacitor.

Both the high-voltage and low-voltage leads of the output cable should be bonded to STAR GROUND. As a safety precaution, once access to the interior of the Arc Reflection Filter is gained and before any action is taken, the MODE

SELECTOR switch contacts (blades and receptacles) should be bonded to the STAR GROUND.

If company policy requires that a defect report be provided to those performing maintenance, this report should be consulted and the items noted should be investigated at the appropriate point in the maintenance procedure. Inspection and maintenance should be carried out in accordance with the following steps.

Follow the suggested routine maintenance procedures contained in the instruction manuals for the particular model of impulse generator and for the Dart Cable Analysis System. Any testing of the impulse generator can be performed without disconnecting the Arc Reflection Filter by setting the MODE SELECTOR switch of the Arc Reflection Filter to PROOF/BURN/IMPULSE.

MAINTENANCE PROCEDURE

The following steps must be performed as a maintenance procedure for the Arc Reflection Filter at least every six months.

1. Examine all cables and permanent grounds to locate any loose or damaged terminals.
2. Inspect and clean the outer jackets of both the input and output high voltage cables; check for breaks in these jackets.

WARNING

Breaks in the jackets of these cables may cause the SURGE GROUND to come in contact with the ARC REFLECTION FILTER CHASSIS GROUND (connects to STAR GROUND). Dangerously high voltages may appear on the system chassis if the SURGE GROUND comes in contact with the system chassis ground.

3. Check the action of the MODE SELECTOR switch to see that it operates freely.
4. Wipe the entire case clean and check for damage.
5. Remove the sides from the case by removing the six screws in each panel. As a safety precaution, once access to the interior is gained and before any action is taken, the MODE SELECTOR switch contacts (blades and receptacles) should be temporarily bonded to the ARC REFLECTION FILTER CHASSIS GROUND (connects to STAR GROUND). During reassembly, the six screws removed from each panel should be replaced with new strip-lok screws or the panels will shake loose.
6. Check to see that all screws and nuts are tight.

7. Examine all electrical connections; check for evidence of corrosion, fracture, or burning.

8. Check the operation of the MODE SELECTOR switch on the Arc Reflection Filter to be sure that it engages properly in both positions.

9. Clean all electrical insulating supports and surfaces with a clean, dry, soft cloth. Do not use solvents or liquids. Clean, low-pressure air may be used.

10. As the cleaning proceeds, inspect all components on the protection network circuit board for burned sections or loose bonds. Check the capacitor for oil leaks. Check the choke for evidence of burning.

11. Check surge grounds:

    11.1 Remove the temporary ground bonds from the MODE SELECTOR switch of the Arc Reflection Filter.

    11.2 Uncoil some of the output cable from the reel. Place the SURGE GROUND TEST LEAD and HV TEST LEAD so that they are well insulated from ground (STAR GROUND).

    11.3 Connect the OUTPUT HV LEAD to the HV OUT terminal inside the rear access panel and connect the OUTPUT SURGE GROUND to one of the SURGE GND terminals. Close the rear access panel.

    11.4 Measure the leakage path between the output cable low-voltage return clamp (SURGE GROUND) and the ARC REFLECTION FILTER CHASSIS GROUND (connects to STAR GROUND) with a megohmmeter. This path should measure in excess of 5 MΩ.

    11.5 If a dielectric test set is available, the isolation of the SURGE GROUND from the ARC REFLECTION FILTER CHASSIS GROUND (connects to STAR GROUND) may be tested at voltages up to 5 kV dc.

12. When work has been completed, make a Performance Check in accordance with the procedure given in Section 8.

8

Troubleshooting and Repair

TROUBLESHOOTING

Megger maintains a complete repair service and recommends that its customers take advantage of this service in the event of any equipment malfunction.

If the Arc Reflection Filter fails to operate properly, the following information will be useful in determining the cause of the malfunction. Table 3 identifies possible equipment malfunctions and suggests the possible cause. The schematic diagram (Fig. 2) will be helpful in locating the components. Refer to Section 9 when ordering replacement parts.

WARNING

The Arc Reflection system can produce and contain dangerous voltages. Any service or repair of this equipment should be performed only by qualified persons who are aware of high-voltage hazards and the necessary precautions routinely taken to prevent injury.

Any trouble reports submitted should be reviewed prior to work done under this section. Table 3 does not specifically suggest wiring or hardware defects since these are possible defects that must always be considered in every case and are not particular to this unit.

Table 2: Arc Reflection Filter Troubleshooting Guide

Malfunction	Possible Cause
Start circuit of generator inoperative:	Open circuit in system interlock circuit. Microswitches defective. Rear access panel door not activating microswitch MODE SELECTOR switch of Arc Reflection Filter not activating microswitches.

Malfunction	Possible Cause
Arc Reflection Filter in proof/burn/impulse mode Low or no output voltage:	Defect in impulse generator Open or short circuit in high-voltage input or output cable
Voltage available at input but not at output:	Defect in the MODE SELECTOR switch of the Arc Reflection Filter Open or short circuit in high-voltage input or output cable.
Arc Reflection Filter in arc reflection test mode Low or no output voltage	Filter network capacitor shorted. Defect in high-voltage discharge assembly. Open or short in input or output cable. Defect in high-voltage choke.
Voltage available at input but not at output	Defect in MODE SELECTOR switch of the Arc Reflection Filter. Open or short in high-voltage input or output cable. Defect in choke.

SETUP FOR SYSTEM TESTS

1. Observe all safety precautions; erect safety barriers.
2. Choose a location that meets the following conditions:
   a. Locate the vehicle so that it can be safely parked; set the brakes or block the wheels.
   b. An electrical service suitable for the system must be available within 150 ft (45.6 m) of the chosen location, unless a longer cable option is included or if the system includes a motor-driven generator. If the 150-ft (45.6 m) power cord is used, the service ground wire must be connected to a secure low-resistance ground (less than 5 Ω). The power source must have a high rupture fuse or circuit breaker with rating not to exceed 15/7.5 A, 120/240 V ac, 50/60 Hz.
   c. A secure low-resistance ground (less than 5 Ω) must be located within 20 ft (6 m) of the vehicle. A driven ground is often used. This ground is called the LOCAL EARTH GROUND and is used to maintain the surrounding area at the same potential as the test system.
   d. The location should be as dry as possible.
   e. There should be no flammable material stored in the vicinity.
   f. There should be adequate ventilation in the test area.
   g. Set up suitable safety barriers to protect the operator from traffic hazards and to prevent intrusion by unauthorized personnel. Warning lights are recommended.
3. After a satisfactory location for the equipment has been selected, connect the STAR GROUND of the system to the LOCAL EARTH GROUND using GROUND CABLE (W3). This ground takes the places of the SAFETY GROUND used in normal testing. Refer to Section 5 for details.
4. Verify that a connection is made between the VEHICLE CHASSIS GROUND and STAR GROUND; refer to Section 5 for details.
5. Connect the output SURGE GROUND TEST LEAD (low-voltage return lead of the 150-ft (45.6-m) high-voltage output cable (W2) with the vice-grip clamp) to the LOCAL EARTH GROUND (same driven ground used in step 3).

WARNING

Do not extend the SURGE GROUND TEST LEAD.

6. Connect the OUTPUT SURGE GROUND (low-voltage return lead of the 150-ft (45.6-m) high-voltage output cable (W2) with the lug) to one of the SURGE GND terminals inside the rear access panel of the Arc Reflection Filter.

7. Connect the OUTPUT HV LEAD (high-voltage lead of the 150-ft (45.6-m) high-voltage output cable (W2) with the lug) to the HV OUT terminal inside the rear access panel of the Arc Reflection Filter.

8. Ensure that:

- The main switch of the impulse generator is set to OFF.
- The rear access panel of the Arc Reflection Filter is closed.
- The MODE SELECTOR switch of the impulse generator is set to GROUND.
- The MODE SELECTOR switch of the Arc Reflection Filter is set to either PROOF/BURN/IMPULSE or ARC REFLECTION TEST.
- The OUTPUT VOLTAGE CONTROL of the impulse generator is set to zero (Zero Start).

9. Connect the 150-ft (45.6-m) power input cable (W9) to the service outlet.

10. Connect the power cord of the Dart to the duplex outlet on the power cable reel.

11. Connect the power cord of the impulse generator to the duplex outlet on the power cable reel.

12. For vehicles having a motor-driven generator:

    a. Make sure that the ground and neutral of the generator are securely tied to the machine frame and to the VEHICLE CHASSIS GROUND. Be sure that the VEHICLE CHASSIS GROUND is connected to STAR GROUND.

    b. Start the engine-generator and warm up sufficiently to ensure normal stable operation.

    c. Check the engine-generator voltage to ensure proper input voltage.

    d. Connect the power cord of the Dart to the generator.

    e. Connect the power cord of the impulse generator to the generator.

13. Operation from a portable engine-generator:

    a. Locate the engine-generator in a well-ventilated area at least 10 ft (3 m) from the test system.

    b. Store spare fuel in a suitable safety container well away from both the engine-generator and the test system.

    c. Provide a ground bond between the engine-generator frame and a local secure low-resistance ground (less than 5 Ω). Be sure that the green neutral wire is grounded. These leads should be no longer than 25 ft (7.6 m) and should be equivalent to No. 8 AWG or larger.

    d. Start the engine-generator and warm up sufficiently to ensure normal stable operation.

e. Check the engine-generator voltage to ensure proper output voltage.

f. Connect the power cord of the Dart to the generator.

g. Connect the power cord of the impulse generator to the generator.

WARNING

Be careful when refueling an engine-generator to avoid fire. Do not refuel while running.

When these procedures have been completed, the test may be conducted in accordance with the following procedures.

OUTPUT CABLE CHECK

To check the cable, perform the following steps:

1. Ensure that the Setup for System Tests procedures in this section have been performed.
2. Verify that STAR GROUND is connected to LOCAL EARTH GROUND and that the SURGE GROUND TEST LEAD is connected to LOCAL EARTH GROUND.
3. Insulate and space the two vice-grip clamps of the high-voltage output cable about 1/8 to 1/4 in. (3.175 to 6.35 mm) apart.
4. Set the MODE SELECTOR switch on the Arc Reflection Filter to PROOF/BURN/IMPULSE.
5. Set the MODE SELECTOR switch on the impulse generator to PROOF/BURN.
6. Turn the POWER circuit breaker on the impulse generator to ON.
7. Set the AMMETER RANGE switch on the impulse generator to the highest range.
8. Set the OUTPUT VOLTAGE CONTROL knob on the impulse generator firmly to zero.
9. Raise the OUTPUT VOLTAGE CONTROL on the impulse generator to the desired level. Breakdown of the gap should occur at about 10 kV. At this time, the voltmeter reading on the impulse generator will decrease and its ammeter reading will increase. If this occurs the cable is satisfactory.
10. If the output cable is short-circuited, an ammeter reading will be present, but the gap at the output of the test cable will not spark over.
11. If further testing is required, to transfer to another mode, refer to the Transfer Procedure in Section 6.

12. If testing is complete, perform the Discharge of Cable and Shutdown Procedure in Section 6.

PERFORMANCE CHECK

The following procedures can be performed anytime to verify proper operation, either in the shop after performing routine maintenance or in the field prior to conducting a fault locating operation. If all conditions of the following tests are met, the system is fully functional.

- Impulse Function Test: tests the impulse function of the system in the proof/burn/impulse mode.
- Arc Reflection Impulse Function Test: tests the impulse function of the system in the arc reflection test mode.
- Proof Function Test: tests the proof test mode of the system.
- Burn Function Test: tests the burn down mode of the system.
- Arc Reflection Function Test: tests the arc reflection test mode of the system.
- TDR Function Test: tests the TDR mode of the system.

Fault characteristics can vary widely and in some cases can even temporarily clear themselves. For such unusual conditions, the performance check procedures can verify proper performance so that the problem of fault characteristics can be clearly isolated.

The following minimum air clearances must be maintained between the exposed energized conductor and any adjacent grounds to prevent sparkover. Additional sparkover may create a safety hazard. The clearance values shown apply to the direct air path at the point of closest proximity to ground.

Test Voltage	Direct Air Path	Path along Nylon Rope
5 kV	1-1/4 in. (31.8 mm)	1-1/4 in. (31.8 mm)
25 kV	2-5/8 in. (66.7 mm)	6-1/4 in. (158.8 mm)

Impulse Function Test

To test the impulse function of the system in the PROOF/BURN/IMPULSE mode, perform the following procedure:

1. Ensure that the Setup for System Tests procedures in this section have been performed.

2. Verify that STAR GROUND is connected to LOCAL EARTH GROUND and that the SURGE GROUND TEST LEAD is connected to LOCAL EARTH GROUND.
3. Connect the HV TEST LEAD of the output cable to the SURGE GROUND TEST LEAD.
4. Set the MODE SELECTOR switch of the Arc Reflection Filter to PROOF/BURN/IMPULSE.
5. Set the MODE SELECTOR switch of the impulse generator to IMPULSE.
6. Turn the POWER circuit breaker on the impulse generator to ON.
7. Set the AMMETER RANGE switch on the impulse generator to the highest range.
8. Set the OUTPUT VOLTAGE CONTROL knob on the impulse generator firmly to zero.
9. Slowly turn the OUTPUT VOLTAGE CONTROL on the impulse generator fully clockwise and observe the following:
   a. Between each discharge the impulse capacitor charges to approximately its maximum value as indicated on the kilovoltmeter of the impulse generator.
   b. At each discharge, the kilovoltmeter needle swings downward and then begins to increase as the impulse capacitor completes its charge.
   c. In addition, at each discharge, the milliammeter of the impulse generator increases to 50 percent of full scale or more and then decreases as the impulse capacitor completes its charge.
10. These meter indications mean that the IMPULSE portion of the system is operating properly. If these indications are not observed, double check the procedure and refer to Troubleshooting and Repair.
11. This completes the Impulse Function Test. If further testing is required, to transfer to another mode, refer to the Transfer Procedure in Section 6.
12. If testing is complete, perform the Discharge of Cable and Shutdown Procedure in Section 6.

Arc Reflection Impulse Function Test

To test the impulse function of the system in the arc reflection test mode, perform the following procedure:

1. Ensure that the Setup for System Tests procedures in this section have been performed.

2. Verify that STAR GROUND is connected to LOCAL EARTH GROUND and that the SURGE GROUND TEST LEAD is connected to LOCAL EARTH GROUND.
3. Connect the HV TEST LEAD of the output cable to the SURGE GROUND TEST LEAD.
4. Set the MODE SELECTOR switch of the Arc Reflection Filter to ARC REFLECTION TEST.
5. Set the MODE SELECTOR switch of the impulse generator to IMPULSE.
6. Turn the POWER circuit breaker on the impulse generator to ON.
7. Set the AMMETER RANGE switch on the impulse generator to the highest range.
8. Set the OUTPUT VOLTAGE CONTROL knob on the impulse generator firmly to zero.
9. Slowly turn the OUTPUT VOLTAGE CONTROL on the impulse generator fully clockwise and observe the following:
   a. Between each discharge the impulse capacitor charges to approximately its maximum value as indicated on the kilovoltmeter of the impulse generator.
   b. At each discharge, the kilovoltmeter needle swings downward and then begins to increase as the impulse capacitor completes its charge.
   c. In addition, at each discharge, the milliammeter of the impulse generator increases 50 percent of full scale or more and then decreases as the impulse capacitor completes its charge.
10. These meter indications mean that the impulse function of the arc reflection test mode is operating properly. If these indications are not observed, double check the procedure and refer to Troubleshooting and Repair.
11. This completes the Arc Reflection Impulse Function Test. If further testing is required, refer to the Transfer Procedure in Section 6.
12. If testing is complete, perform the Discharge of Cable and Shutdown Procedure in Section 6.

Proof Function Test

To test the proof test mode of the system, perform the following procedure:

1. Ensure that the Setup for System Tests procedures in this section have been performed.
2. Verify that STAR GROUND is connected to LOCAL EARTH GROUND and that the SURGE GROUND TEST LEAD is connected to LOCAL EARTH GROUND.

3. Position the HV TEST LEAD in a barricaded high-voltage test area so that it is insulated from ground or any other conductive object by a minimum of 2 ft (0.61 m) of air space.
4. Set the MODE SELECTOR switch of the Arc Reflection Filter to PROOF/BURN/IMPULSE.
5. Set the MODE SELECTOR switch of the impulse generator to PROOF/BURN.
6. Turn the POWER circuit breaker on the impulse generator to ON.
7. Set the ammeter RANGE switch on the impulse generator to the most sensitive range.
8. Set the OUTPUT VOLTAGE CONTROL knob on the impulse generator firmly to zero.
9. Slowly turn the OUTPUT VOLTAGE CONTROL on the impulse generator fully clockwise and observe the following:
   a. The kilovoltmeter indicates the maximum proof voltage.
   b. The milliammeter indicates less than 0.05 mA leakage current.
10. These meter indications mean that the proof testing portion of the system is operating properly. If the leakage current is excessive, make sure that the high-voltage output connector is properly insulated before performing troubleshooting and repair. Sometimes it is helpful to put the high-voltage output connector in a plastic bag to reduce leakage. If these indications are not observed, double check the procedure and refer to Troubleshooting and Repair.
11. This completes the Proof Function Test. If further testing is required, to transfer to another mode, refer to the Transfer Procedure in Section 6.
12. .If testing is complete, perform the Discharge of Cable and Shutdown Procedure in Section 6.

Burn Function Test

To test the burn down mode of the system, perform the following procedure:

1. Ensure that the Setup for System Tests procedures in this section have been performed.
2. Verify that STAR GROUND is connected to LOCAL EARTH GROUND and that the SURGE GROUND TEST LEAD is connected to LOCAL EARTH GROUND.
3. Connect the HV TEST LEAD of the output cable to the SURGE GROUND TEST LEAD.

4. Set the MODE SELECTOR switch of the Arc Reflection Filter to PROOF/BURN/IMPULSE.
5. Set the MODE SELECTOR switch of the impulse generator to PROOF/BURN.
6. Turn the POWER circuit breaker on the impulse generator to ON.
7. Set the ammeter RANGE switch on the impulse generator to the highest range.
8. Slowly turn the OUTPUT VOLTAGE CONTROL on the impulse generator fully clockwise and observe the following:
   a. The kilovoltmeter indicates less than 500 V.
   b. The milliammeter indicates the maximum current output specified for the particular model of impulse generator.
9. These meter indications mean the burn down function of the system is operating properly. If these indications are not observed, double check the procedure and refer to Troubleshooting and Repair.
10. This completes the Burn Function Test. If further testing is required, refer to the Transfer Procedure in Section 6.
11. If testing is complete, perform the Discharge of Cable and Shutdown Procedure in Section 6.

Arc Reflection Function Test

To test the arc reflection test mode of the system, perform the following procedure:

1. Ensure that the Setup for System Tests procedures in this section have been performed.
2. Verify that STAR GROUND is connected to LOCAL EARTH GROUND and that the SURGE GROUND TEST LEAD is connected to LOCAL EARTH GROUND.
3. Position the HV TEST LEAD in a barricaded high-voltage test area so that it is insulated from ground or any other conductive object by a minimum of 2 ft (0.61 m) of air space.
4. Create a spark gap between the vice-grip clamps on the high-voltage output cable by adjusting the spacing between the two clamps until it is less than 0.104 in. (#38 drill). This will set the breakdown voltage to less than 8 kV.
5. Set the MODE SELECTOR switch of the Arc Reflection Filter to ARC REFLECTION TEST.
6. Turn the Dart Cable Analysis System's POWER switch to ON.

7. Set the range: Adjust the RANGE to 500 ft (150 m).
8. With the high-voltage output cable open circuited a positive reflection is present on the screen.
9. Set the MODE SELECTOR switch of the impulse generator to IMPULSE.
10. Turn the POWER circuit breaker on the impulse generator to ON.
11. Set the AMMETER RANGE switch on the impulse generator to the highest range.
12. Set the OUTPUT VOLTAGE CONTROL on the impulse generator knob firmly to zero.
13. Slowly turn the OUTPUT VOLTAGE CONTROL on the impulse generator fully clockwise until the following is observed:
    a. The spark gap between the vice-grip clamps of the high-voltage cable breaks down.
    b. Between each discharge the impulse capacitor charges to approximately its maximum value as indicated on the kilovoltmeter of the impulse generator.
    c. At each discharge, the kilovoltmeter needle swings downward and then begins to increase as the impulse capacitor completes its charge.
    d. In addition, at each discharge, the milliammeter of the impulse generator increases 50 percent of full scale or more and then decreases as the impulse capacitor completes its charge.
    e. Do not exceed the rated impulse capability of the impulse generator. If the spark gap fails to breakdown before 8 kV is reached, readjust the spacing.
14. After the voltage necessary for breakdown is reached, increase the output voltage slightly.
15. During the breakdown of the spark gap a negative reflection is present on the screen. This is the reflection from the arc.
16. The presence of the positive reflection that becomes negative during the arc indicates that the arc reflection test mode of the system is operating properly. If these indications are not observed, double check the procedure and refer to Troubleshooting and Repair.
17. This completes the Arc Reflection Function Test. If further testing is required, to transfer to another mode, refer to the Transfer Procedure in Section 6.
18. If testing is complete, perform the Discharge of Cable and Shutdown Procedure in Section 6.

TDR Function Test

To test the TDR mode of the system, perform the following procedure:

1. Set the MODE SELECTOR switch on the Arc Reflection Filter to ARC REFLECTION TEST.
2. Set the MODE SELECTOR switch on the impulse generator to GROUND. High voltage is not used with this test.
3. Position the HV TEST LEAD so that it is insulated from the SURGE GROUND TEST LEAD and any other ground. This ensures that the output cable is open circuited.
4. Turn the POWER switch on the Dart Cable Analysis System to ON.
5. Set the range: Adjust the RANGE to 500 ft (150 m).
6. With the high-voltage output cable open circuited, a positive reflection is present on the screen.
7. Connect the HV TEST LEAD to the SURGE GROUND TEST LEAD. This ensures that the output cable is short-circuited.
8. With the high-voltage output cable short-circuited, a negative reflection is present on the screen.
9. The presence of the positive and negative reflections indicate that TDR portion of the system is operating properly. If these indications are not observed, double check the procedure and refer to Troubleshooting and Repair.
10. This completes the TDR Function Test. If further testing is required, refer to the Transfer Procedure in Section 6.
11. If testing is complete, perform the Discharge of Cable and Shutdown Procedure in Section 6.

9

Replaceable Parts List

Symbol	Description	Qty	Part No.
C1	Capacitor, pulse	1	29745
J1	Interlock Connector	1	10225
J2, J3	BNC Connector	1	19997-1
L1	Choke Assembly	1	29678
PCB1	Protection Network	1	29621
R1	Discharge Resistor Assembly	1	29747
S1	Interlock Switch	1	19152
S2	Mode Selector Switch Assembly	1	29738
T1	Current Transformer Assembly	1	29755
W2	HV Output Cable Assembly, 150 ft (45.6 m)	1	33157
W3	Ground Cable Assembly, 25 ft (7.6 m) - Driven Ground	1	19265
W4	Ground Cable Assembly, 4 ft (1.2 m) - Impulse Generator Chassis	1	19265-4
W5	Ground Cable Assembly, 4 ft (1.2 m) - Vehicle Chassis	1	19265-4
W6	Ground Cable Assembly, 28 in. (71.1 cm) - Analyzer Chassis	1	19265-6

W7	Ground Cable Assembly, 28 in. (71.1 cm) - Filter Chassis	1	19265-6
W8	Ground Cable Assembly, 12 ft (3.6 m) - Safety Ground Reel	1	19265-7
W9	Power Cable Reel Assembly, 150 ft (45.6 m)	1	27908
W10	Ground Cable Assembly, 150 ft (45.6 m) Safety Ground - Cable Under Test	1	27907
W11	Signal Cable, RG58, 3 ft (0.91 m)	1	19907-2

GLOSSARY

⚠	High-voltage warning
⚠	Use only in accordance with Instruction Manual.
⏚	Grounding procedures must be followed.
DART CHASSIS GROUND	The ground lug on the Dart Cable Analysis System that permanently connects to the ground lug on the Arc Reflection Filter.
ANSI	American National Standards Institute
ARC REFLECTION FILTER CHASSIS GROUND	The ground lug on the Arc Reflection Filter that permanently connects to STAR GROUND.
ART	Arc reflection test
EPR	Ethylene propylene rubber
HMW	High molecular weight
HV TEST LEAD	Output end of the 150-ft (45.6-m) high-voltage test cable contained on a reel. The HV TEST LEAD is the white lead terminated with a vice-grip clamp
IEEE	Institute of Electrical and Electronic Engineers
IMPULSE GENERATOR CHASSIS GROUND	The ground lug on the impulse generator that permanently connects to STAR GROUND
LOCAL EARTH GROUND	Driven earth ground made before each test, connects to STAR GROUND.
OUTPUT HV LEAD	Input end of the 150-ft (45.6-m) high-voltage test cable contained on a reel. The OUTPUT HV LEAD is the white lead terminated with a lug.
OUTPUT SURGE GROUND	Input end of the 150-ft (45.6-m) high-voltage test cable contained on a reel. The OUTPUT HV LEAD is the black lead cable terminated with a lug.

PILC	Paper insulated lead covered
POWER GROUND	The third (green wire) of the power cord connects at the source of power for the system.
SAFETY GROUND	A temporary ground, this connection is made before each test between STAR GROUND, the ground stud on the reel of 150-ft (45.6-m) cable, and SPECIMEN GROUND.
SAFETY GROUND JUMPER	Temporary connection (not supplied) made between the high-voltage conductor of the cable under test to SPECIMEN GROUND.
SAFETY GROUND STICK	An insulated stick (sometimes called a hot stick) with a hook type electrode connected to ground via an insulated cable. In some designs, frequently known as high-voltage discharge sticks, a resistor is connected between the electrode and the ground cable. Both are used to discharge capacitive specimens by providing a low impedance path to ground. They must be suitably rated for the voltage and capacitance of the specimen to be discharged.
sparkover	A disruptive discharge in the form of an arc or spark between two electrical conductors or between a conductor and earth (also called arcover or flashover).
SPECIMEN GROUND	Ground conductor (sheath) of cable under test. Assumed to be connected to the power system's driven ground.
STAR GROUND	The central ground point of the system, a large wing nut on system chassis (pallet).
SURGE GROUND	The shield of the coaxial high-voltage output cable. This ground is connected to SPECIMEN GROUND before each test. The connections at the ends are designated OUTPUT SURGE GROUND and SURGE GROUND TEST LEAD.
SURGE GROUND TEST LEAD	Output end of the 150-ft (45.6-m) high-voltage test cable contained on a reel. The SURGE GROUND TEST LEAD is the black lead terminated with a vice-grip clamp
TDR	Time domain reflectometer indicates and measures reflection characteristics of a transmission system.

VEHICLE CHASSIS GROUND	A lug (user supplied) on the vehicle chassis that permanently connects to STAR GROUND when the Arc Reflection system is installed in a vehicle.
XLPE	Cross-linked polyethylene

WARRANTY

Products supplied by Megger are warranted against defects in material and workmanship for a period of one year following shipment. Our liability is specifically limited to replacing or repairing, at our option, defective equipment. Equipment returned to the factory for repair must be shipped prepaid and insured. This warranty does not include batteries, lamps or similar items, where the original manufacturer's warranty shall apply. We make no other warranty. The warranty is void in the event of abuse (failure to follow recommended operating procedures) or failure by the customer to perform specific maintenance as indicated in this manual.